QuadraFlow cooling tower

MARLEY®

A Truly Unique Cooling Tower Design

The QuadraFlow is a unique cooling tower. Unique in its design—unique in its appearance—unique in its performance reliability in all seasons—unique in its maintainability—and unique in its use of inert, noncorroding construction materials. The FRP structure and basins—PVC fill, louvers and eliminators and the stainless steel hardware and mechanical equipment support structure all combine to create a cooling tower capable of forgiving the kind of operation and treatment that would destroy lesser towers.

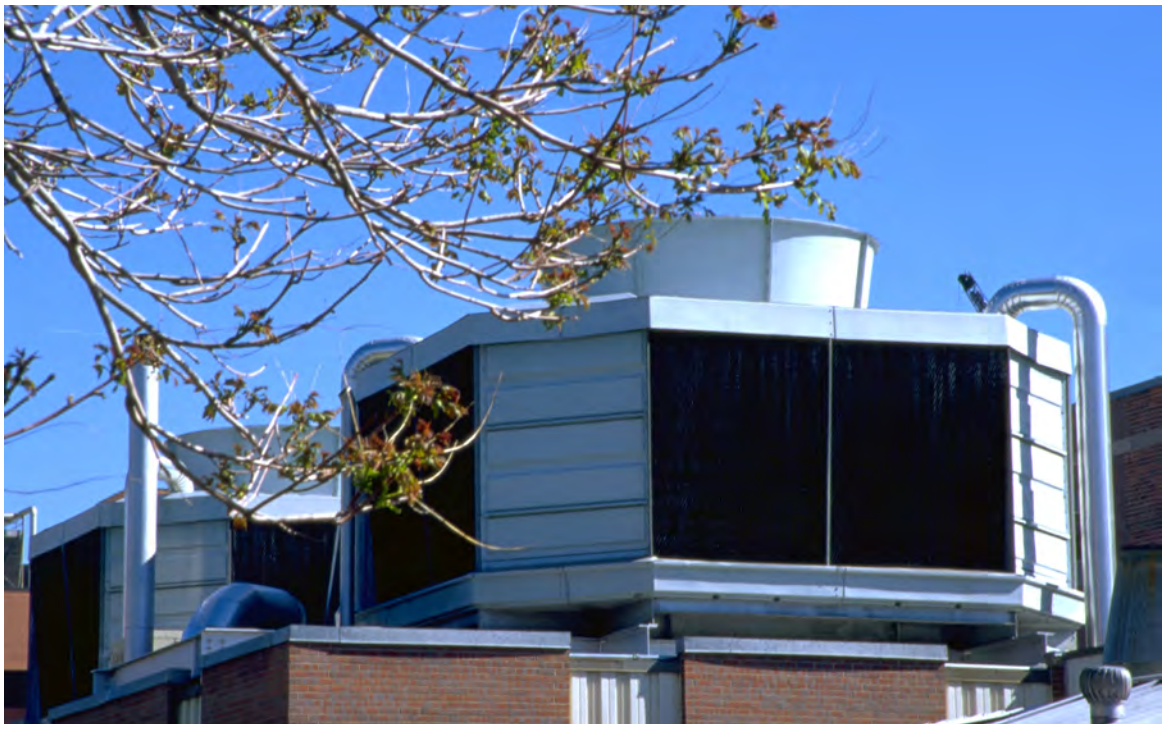

Long Life Construction

The QuadraFlow is manufactured and assembled from corrosion-proof materials whose reliability is unquestioned even in very severe operating environments.

CTI Certified

Although the QuadraFlow's thermal ratings are certified by CTI, SPX Cooling Technologies will not use certification as a means to avoid responsibility. The QuadraFlow is guaranteed to work as well in the real world as it does in the laboratory. SPX guarantees the thermal performance of each QuadraFlow as installed.

5-Year Warranty

The QuadraFlow cooling tower is warranted for five full years! This includes fill, mechanical equipment, and structure.

Low Operating Costs

Marley high-efficiency fill and fans, gravity-flow water distribution, and efficient Geareducer® drive work together to offer maximum cooling with minimum power use.

All Season Performance

The QuadraFlow performs as specified in the heat of summer—responds well to energy-management techniques in the spring and fall—operates virtually ice-free in the dead of winter—and offers simple maintenance all year long.

Low Maintenance

Induced-draft adjustable-pitch fan—Marley System 5 Geareducer—stainless steel free floating driveshaft—TEFC, 1.15 service factor, horizontal-shaft motor and inert construction materials. Geareducer oil changes are not required for five full years—the lowest maintenance requirements in the industry.

Features and Benefits

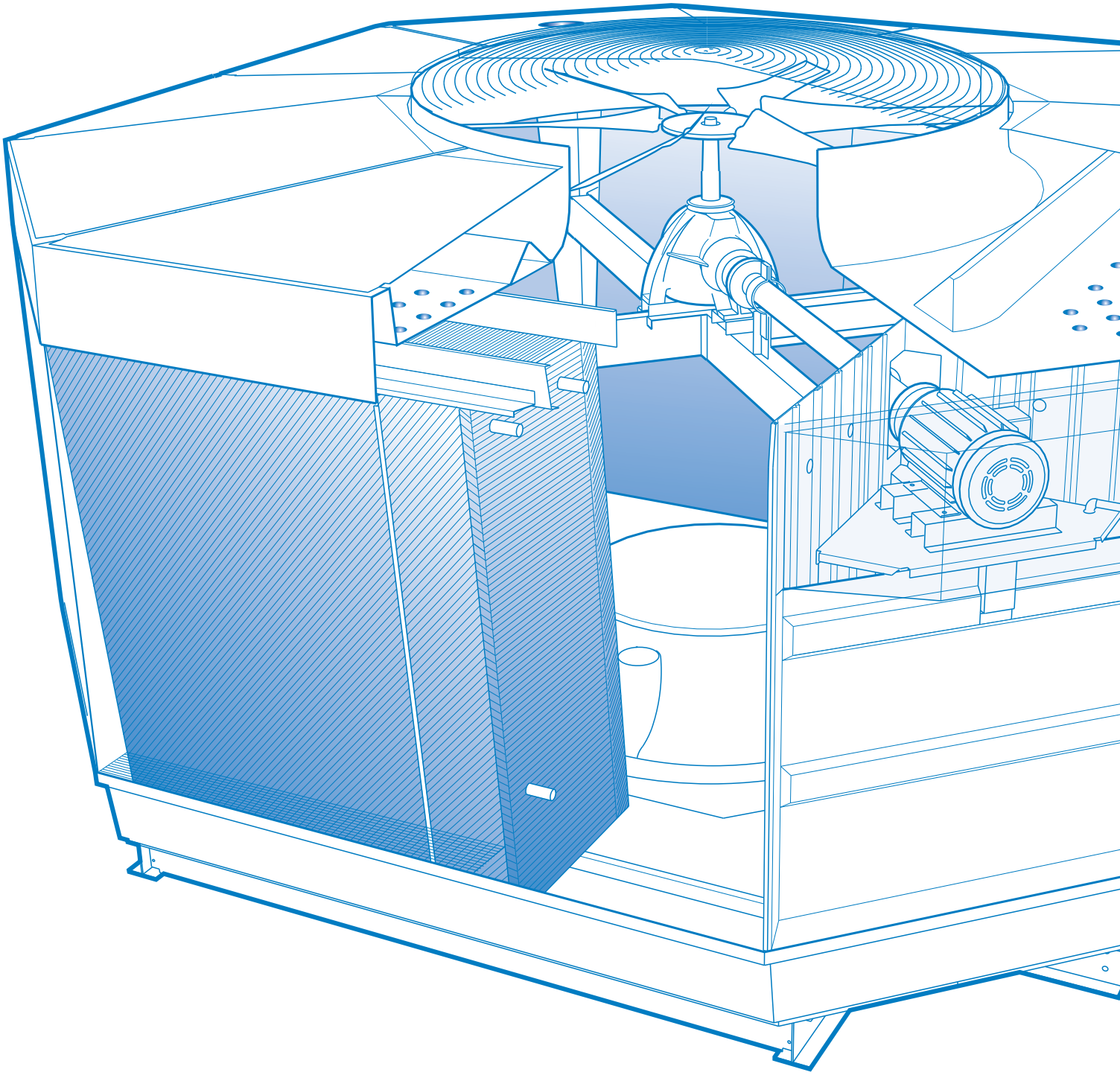

Air Movement Package

- Removable fan guard—welded heavy gauge rods. Hot dip galvanized after fabrication.
- Eased inlet fan cylinder—assures full area, low turbulent airflow through the cylinder.
- Marley fan—cast aluminum alloy or glass reinforced epoxy. Adjustable pitch blades.
- Marley System 5 Geareducer—no oil changes for five full years. Offers significant savings in maintenance costs.
- External Geareducer Oil level Gauge and Fill-Drain connection—user friendly maintenance.
- Marley Full-Floating Driveshaft—stainless steel tube and non-lubricated neoprene flexible elements assure long, maintenance-free service.
- TEFC Fan Motor—1.15 service factor, variable torque, and specially insulated for cooling tower duty.

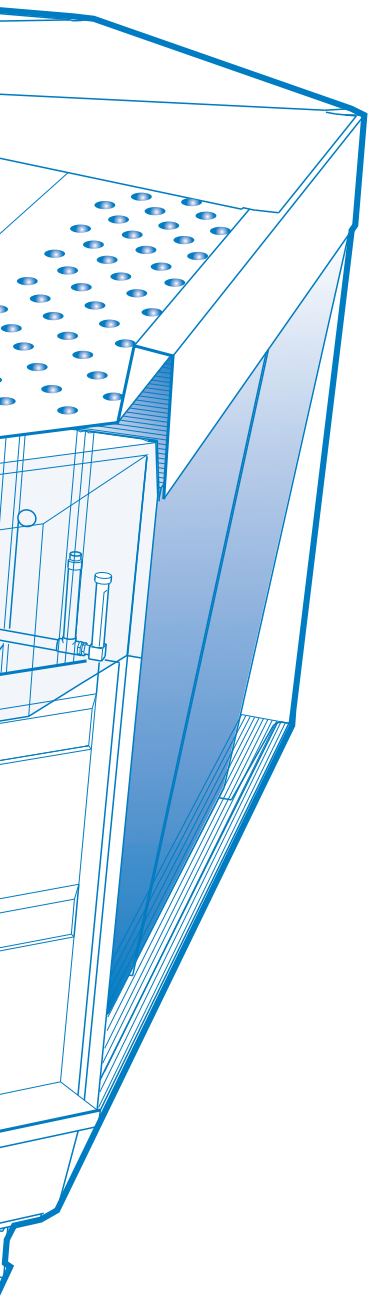

Water Distribution System

- Gravity flow distribution system—easy, nonrestrictive maintenance. Basin covers are standard.
- Marley Spiral Target polypropylene nozzles.
- Marley MX thermoformed PVC film fill—suspended from structural stainless steel tubing. Integral eliminators and louvers keep circulating water confined to fill, even at low air rates.

Structure

- Crossflow configuration—easier and safer to maintain.
- FRP and series 300 stainless steel—corrosion proof construction.
- Four air inlet faces—minimizes recirculation.
- Supporting steel—simplifies foundation requirements

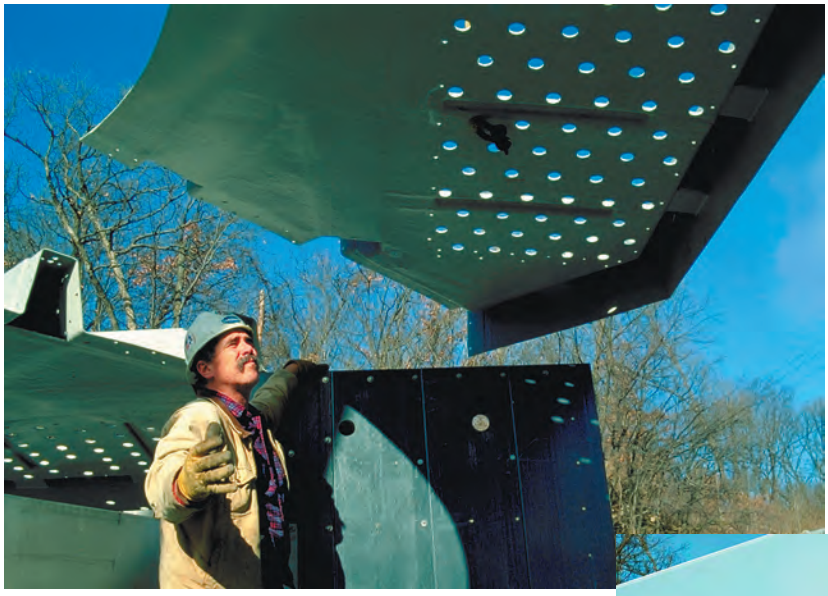

On-Site Assembly

The QuadraFlow is factory-fabricated, and is designed to be assembled at the jobsite. This allows the design flexibility that results from the unique QuadraFlow configuration and permits a wide variety of orientations.

Normally this assembly is included as part of the cooling tower contract, and is performed by erection subcontractors recognized and sanctioned by SPX. Their knowledge and expertise assures proper fit-up, alignment, and sealing of the various tower components—and contributes significantly to the trouble-free long-term operation of the tower. It also enables SPX to guarantee the thermal performance of the assembled tower. Therefore, it is strongly recommended that either SPX supervision or complete tower erection be included as part of your order.

Nevertheless, we recognize that circumstances may produce situations that require the tower to be assembled by inexperienced personnel without benefit of SPX erection labor or supervision. In support of that, a comprehensive, illustrated, assembly instruction manual is included with every shipment. This manual pictorially identifies the various tower components and provides step-by-step instructions designed to result in a properly assembled installation. Copies of this manual are also available to customers, on request, prior to the shipment of the tower to permit planning of the assembly process. However, we regret that thermal performance of a QuadraFlow cannot be certified or guaranteed without qualified SPX supervision during the assembly process.

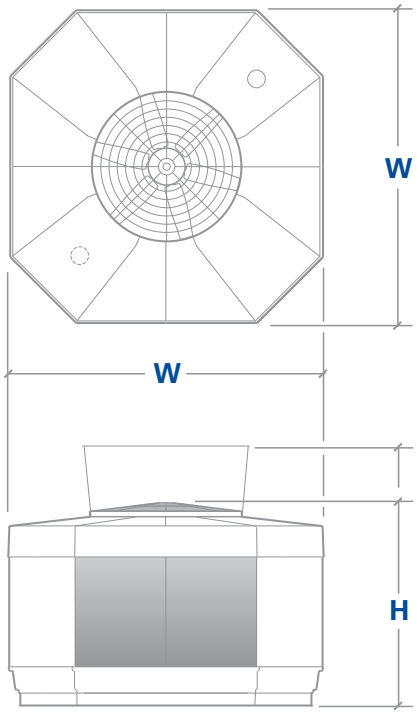

Model	Tons	W	H
21120	129-183	12'-8"	7'-2"
21220	186-211	12'-8"	8'-5"
21320	204-256	12'-8"	9'-9"
22120	243-304	14'-1"	8'-6"
22220	312-425	14'-1"	9'-11"
23120	390-475	16'-8"	9'-11"
23220	419-546	16'-8"	11'-3"
24120*	531-836	24'-6"	12'-9"
24220*	796-1047	24'-6"	16'-1"

*Models in this box size require a taller fan cylinder

Available Options

- Inlet Water Bypass—provision for total water bypass directly into the tower collection basin during cold weather operation.
- Hoistable Steel Grillage—allows assembling tower at grade on temporary supports and hoisting into final location.
- Fire Retardant FRP—flame spread rating of 25 or less per ASTM E-84.
- Control Systems—ranging in sophistication from standard fan starters and disconnects to Programmable Logic Controllers that work in conjunction with your building or process system.
- Variable Speed Drive—the ultimate in temperature control, energy management, and mechanical equipment longevity
- Electric Basin Heater Package—maintains collection basin water temperatures between 40°F and 45°F during tower shutdown.
- Vibration Limit Switch—shuts down the fan motor if excessive vibration occurs.
- Solid State Water Level Control Package—monitor basin water level with solenoid-valve water makeup. Configurations include makeup along with high and low water level alarm and cutoff and electric basin heater cutoff.
- Magnetrol® Electric Float Switch—monitor basin water level with solenoid-valve water makeup.

The Quadraflow Engineering Data and Specifications Manual QF-TS provides engineering schematics, data, and information necessary for initial tower layout and details the tower in the form of specification language, providing technical as well as common-sense information on the importance of your specifications. Available on the web at spxcooling.com or see your Marley sales representative for a copy.

The Marley **UPDATE**™ web-based application software provides model selections perfectly tuned to your cooling water system. Functions include model selection, specifications, model optimization, performance curves, engineering data, and free cooling applications. Available to both registered customers and guests at spxcooling.com.

If we can help in any way, feel free to call. To find the Marley representative nearest you call 1 800 462 7539 or check the web at spxcooling.com.

SPX COOLING TECHNOLOGIES, INC.
7401 WEST 129 STREET
OVERLAND PARK, KS 66213 USA
913 664 7400 | spxcooling@spx.com
spxcooling.com

QF-07A | ISSUED 11/2016

SPX®