FL series

CENTRIFUGAL COOLER

engineering data
and specifications

SGS REFRIGERATION

EFFICIENT COIL DESIGN

Tubes are 3/4" or 1" O.D., staggered in the direction of air flow. Turbo-Spacers on 3/4" O.D. coils are located between tubes to provide nominal fin spacing and improve fin efficiency by turbulating the air flow. 1" O.D. coil units are spaced on the tube to offer cleanability and unequaled fin spacing patterns to match application requirements.

MATERIALS OF CONSTRUCTION

- Hot dipped galvanized steel tubes and fins after fabrication.
- Aluminum tubes and fins. Aluminum coils are provided with refrigerant companion socket-weld steel flanges plus bolts, nuts, and gaskets.
- Copper tubes and aluminum fins (3/4" only).
- The coils are constructed and listed in accordance with Underwriters Laboratories Standards. Each coil is tested underwater with 350 PSIG air pressure. All steel coils are tested before and after galvanizing.
- Available nominal fin spacing:

  3/4" Tube: 3, 4, and 6 per inch

  1" Tube: 3, 4, and 6 per inch standard 1.5 and 2 per inch optional

  Variable fin spacing: 1.5/3 and 2/4 per inch

HEAVY DUTY FAN CABINET CONSTRUCTION

- Housing is mill galvanized sheet metal for long life and maximum strength. Stainless steel is optional.
- Air enters coil from all sides, or one side only with optional inlet baffles.
- Support legs are structural steel.
- Blowers are large diameter, high efficiency, forward curved, welded construction, hot dipped galvanized after fabrication.
- Blower scrolls are heavy gauge mill galvanized steel.
- Blowers are changed to optimize performance when higher static pressure is required.
- Fan shafts are large diameter, rust resistant steel with self-aligning ball bearings. Split shafts with a shaft coupling are used on three and four fan units. Ball bearings are provided with external grease fittings.

MOTOR AND BELT DRIVE

Motors are 1750 RPM, TEFC for three-phrase power. Fixed motor and blower sheaves are balanced for smooth operation. Belt guard, motor, and drives are shipped loose for field installation.

AIR DEFROST

above 36°F room temperature

- Units should be selected for a low face velocity (630 FPM or less) to prevent moisture carry over.
- Drain pan is aluminum for long life and corrosion protection. Pan insulation and a mill galvanized or stainless steel cover are optional.

HOT GAS DEFROST COIL ONLY

above 33°F room temperature

- Hot gas defrost for the coil with an unheated drain pan.
- Drain pan is aluminum for long life and corrosion protection. Pan insulation and a mill galvanized or stainless steel cover are optional.

HOT GAS DEFROST COIL ONLY

below 32°F room temperature

- SGS's unique "waffle" stainless steel drain pan allows for the fastest hot gas defrost available. The design assures maximum pan heat in minimum time.
- Drain pan includes insulation and a mill galvanized cover. An optional stainless steel cover is available.
- Interconnecting piping, check valve, and balancing valve between the drain pan and coil are factory installed.

WATER DEFROST

to -20°F room temperature

- One or two water supply manifolds with spray nozzles on branch pipes are mounted above the coil and provide full coverage of the finned surface.
- The recommended defrost water should be 3 to 5 psig and 55 to 60° F at the unit.
- Drain pan is aluminum for long life and furnished with an oversized drain connection.
- Required water flows are shown on each model's capacity page.

ELECTRIC DEFROST

to -20°F room temperature

- Available on 3/4" O.D. tube units only. Tubular heaters are inserted through the Turbo-Spacers in the fin pack to efficiently defrost the coil from the inside out.
- Limited to copper tube/aluminum fin or all aluminum coils.
- Drain pan available with or without heaters.

BLOWER ARRANGEMENT

- Air discharge arrangements are Top (T) or Front (F). See illustration below.
- Motor is located on the same end as the coil connections, typically on the top of the unit. Other motor locations are available.

MOTOR

High efficiency, automatic thermal overload, two speed, and other motor enclosures are available.

DIRECTIONAL DISCHARGE AIR LOUVERS

Adjustable louvers for either vertical or horizontal air flow deflection.

DISCHARGE DUCT ADAPTERS

Factory mounted collars to attach duct work to the fan discharge(s) of the unit.

ELECTRICAL CONTROL PANEL

Factory wired control panels include main fused disconnect, time clocks, 115V control transformer, fan motor starter, defrost heater contactor(s), indicator lights, and ON-OFF switch. Panel carries UL stamp for industrial control panels.

BRASS DISTRIBUTOR

Steel coil with brass distributor for direct expansion halocarbon applications.

SURGE DRUM

- Surge drum for flooded ammonia feed designed for 250 PSIG working pressure. Include ASME stamp and internal float. Relief valve is not included.
- Connections are stubbed without flanges.

ACCESSORIES

shipped loose

- TEV - Thermostatic Expansion Valve
- LLSV - Liquid Line Solenoid Valve and strainer
- Hot gas defrost control kits

WHEN ORDERING PLEASE SPECIFY

- Quantity and complete model number
- SST - Saturated Suction Temperature
- Room Temperature
- Fan motor construction and voltage
- Liquid pressure and temperature for DX feeds
- Options and Accessories
- Control Voltage (if required)
- Steel mains with copper tube coils (if required)
- Number of drawings for:

  "Approval" - Not released for manufacture

  "Information" - Manufacture commences with order approval

In the interest of technological progress, all products are subject to design and/or material change without notice. Changes do not entitle the buyer to corresponding changes, improvements, additions or replacements for equipment previously sold or shipped.

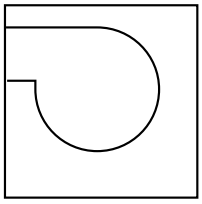

Front

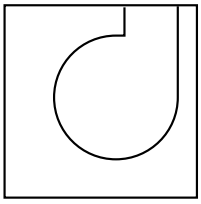

Top

Standard air discharge arrangements looking at refrigerant connection end.

FL D S 2 A 48 10 3 5 RB A HGU RH F

FL Series II

Tube Diameter
D - 3/4"
E - 1"

Coil Material
S - Steel Tube/Fin
A - Aluminum Tube/Fin
C - Copper Tube/Fin

Number of Fans

Fan Size

Nominal Face Area
sq ft

Rows Deep

Nominal Fin Per Inch

Motor Horsepower

Refrigerant Feed
DX - Direct Expansion*
RT - Refrigerant Top
RB - Refrigerant Bottom
FL - Flooded
B - Brine*
CW - Chilled Water*

Fan Discharge
F - Front
T - Top

Hand Arrangement
LH - Left Hand
RH - Right Hand

Type of Defrost
A - Air Defrost Unit
ED - Electric Defrost Coil Only*
EDL - Electric Defrost Coil and Drain Pan*
HGC - Hot Gas Coil Only*
HGU - Hot Gas Coil Only and Drain Pan
WD - Water Defrost

Refrigerant Type
A - Ammonia
F - R-22, R-404A, R-507
PG - Propylene Glycol*
EG - Ethylene Glycol*
CAL - Calcium Chloride*

* 3/4" Tube Coils Only

Nominal capacity shown on individual performance tables on pages 8 thru 33 are for sensible heat removal at 600 feet per minute (FPM) coil face velocity. The three or four fins per inch (FPI) ratings are medium frosted ratings and six FPI is a wet rating. Ratings shown are for recirculated or flooded ammonia and halocarbon refrigerants in accordance with ASHRAE and ARI standards. TD is temperature difference between the coil saturated suction temperature and the entering air temperature. .

- Table 1 lists capacity factors for alternative fin spacing and refrigerant feeds. Multiply capacities listed by these factors as applicable.
- Table 2 lists capacity factors for alternate face velocities and wet coil operation. Multiply nominal capacities on the individual unit performance tables on pages 8 through 33 by these factors as applicable.
- Table 3 lists internal pressure loss thru the units for various face velocities. To obtain fan performance at various face velocities see individual performance tables on pages 8 through 33. Add any external eternal static to internal losses obtained from the table.
- Optimum Horsepower Performance is listed on the individual performance tables pages 8 through 33. The tables allow the designer to select the highest capacities available for various horsepower motors using a frosted coil.
- For a wet coil application, or for room temperatures above 32°F, selection should be limited to 3/4" tube coils with face velocities less than 630 FPM to prevent moisture carryover.
- Brine refrigerants require factory engineering for proper unit selection. Provide required capacity, brine type, brine concentration, room temperature, entering brine temperature, and gpm for unit selection.

Table 1 - Capacity Correction Factors

Rating Variation	Rows Deep				Factor Corrects Rating for
	6	8	10	12**	
Variable 1.5/3 Fin Spacing*	0.85	0.89	0.91	0.92	3 FPI
Variable 2/4 Fin Spacing*	0.85	0.89	0.91	0.92	4 FPI
Ammonia TEV to 0°F SST**	0.83	0.84	0.85	0.85	3 or 4 FPI
Halocarbon TEV to -20°F SST**	0.83	0.84	0.85	0.85	3, 4 or 6 FPI
Halocarbon TEV to -30°F SST**	0.75	0.75	0.76	0.76	3 or 4 FPI
Halocarbon TEV to -40°F SST**	0.66	0.67	0.68	0.68	3 or 4 FPI

* = 3/4" or 1" tubing ** = 3/4" tubing only

Table 2 - Capacity Correction Factors

Frosted Coil Below 30°F					Wet Coil Above 30°F					
					500 FPM		500 FPM		500 FPM	
Rows	500 FPM	600 FPM	800 FPM	800 FPM	4 FPI	6 FPI	4 FPI	6 FPI	4 FPI	6 FPI
6	0.81	1.00	1.08	1.16	0.98	0.92	1.08	1.00	1.11	1.03
8	0.89	1.00	1.08	1.17	0.97	0.90	1.09	1.00	1.12	1.04
10	0.88	1.00	1.09	1.17	0.97	0.89	1.10	1.00	1.13	1.04
12	0.85	1.00	1.10	1.19	0.93	0.86	1.10	1.00	1.13	1.04

Table 2 - Internal Air Pressure Drop

Unit Internal Air Resistance - Inches of Water Gauge														
Tube Diameter	Rows Deep	450 FPM FPI			500 FPM FPI			600 FPM FPI			700 FPM FPI		800 FPM FPI	
		3	4	6	3	4	6	3	4	6	3	4	3	4
3/4"	4	.09	.10	.12	.11	.13	.16	.15	.18	.22	.21	.25	.27	.32
	6	.11	.13	.16	.14	.16	.19	.20	.24	.29	.27	.32	.38	.41
	8	.14	.17	.20	.18	.21	.25	.26	.30	.36	.33	.39	.43	.50
	10	.17	.20	.24	.22	.28	.35	.29	.34	.41	.36	.45	.50	.59
	12	.21	.25	.30	.28	.34	.43	.36	.42	.51	.48	.56	.62	.73
1"	6	.12	.15		.15	.18		.19	.23		.25	.30	.30	.36
	8	.16	.20		.19	.24		.26	.31		.33	.40	.40	.48
	10	.21	.25		.24	.30		.32	.39		.41	.49	.50	.61

For medium frosted coil add 25% For wet coil add 10%

COILS

FL Series centrifugal fan units are designed for medium temperature coolers, freezers or blast freezers. The coils are available in 3/4" or 1" diameter tubes to meet the application requirements. The 3/4" tubers are used for medium temperature freezers and coolers, while the 1" tubes are used for low and medium temperature freezers. All tubes are staggered in the direction of airflow to assure maximum surface-to-air contact and heat transfer.

REFRIGERANT FEEDS

Recirculated coils have graduated liquid feed orifices to balance static head and reduce hot gas blow-by during defrost. Units operating in an overfeed system must have the liquid temperature within 8°F to 30°F of saturated suction temperature depending upon suction temperature, otherwise the liquid feed temperature and pressure must be specified to assure proper coil design. Consult factory for low temperature recirculated R-22 applications.

- B - Brine, or water, coils (single-phase) require factory engineering for proper unit selection.
- DX - Direct Expansion coils are circuited to have a minimum pressure drop and maintain refrigerant velocity for oil return. All direct expansion coils will use 3/4" tubes. Direct expansion coils employ refrigerant distributors and capillaries to feed each circuit. TEVs must be externally equalized, and on ammonia applications, the discharge tube must be removed. Ammonia TEV applications are not recommended for suction temperatures below 0°F or with TD selections less than 10°F. Liquid temperature and pressure must be specified to assure proper coil circuiting and distributor selection. See Table 1 for direct expansion rating correction factors.
- FL - Flooded coils are circuited to minimize internal losses while maintaining minimum surge drum operating level. When closed coupled, the liquid level in the drum should be four inches or more above the coil. Flooded coil ratings are the same as recirculated ratings.
- 50-Hertz - 50-Hertz applications use the same ratings as 60-Hertz units.
- RT - Recirculated Top feed is recommended for air, water, or electric defrost. Refrigerant oil flows downhill to the suction header. This feed type is not recommended for hot gas defrost applications.
- RB - Recirculated Bottom feed is recommended for hot gas defrost applications. The defrost hot gas enters through the suction connection. Hot gas condensate and oil flow downhill, back-flowing through the liquid feed orifices, which restrict gas blow-by. Condensate is relieved through customer's tee located between the coil liquid connection and balancing valve.

AIR THROW

Air throw is up to 200 feet, depending upon discharge air velocity, ceiling height. and aisle location.

RETURN AIR

The units are designed to be located in the conditioned space, or a penthouse, with air inlet pressure losses limited to a flat filter section. Return air ducts should not be used.

DISCHARGE AIR

The units can be operated with discharge pressure losses up to 2.5 inches water gauge due to discharge ducts or high velocity blast freezing /cooling applications.

UNIT LOCATION

The unit is designed to be located on the floor of the conditioned space against a wall or in the middle of the space. Free air flow is required into and out of the unit to assure the design cooling capacity.

DRAIN LINES

Each unit must have a trap (heated when necessary) in the water condensate drain line.

PIPING

Weight of piping, control, etc. should be carried by proper pipe supports. All piping needs to be plumb to the unit's connections. Improperly aligned aluminum units will have leaks in the mating flanges. Steel suction lines on direct expansion ammonia units should be downsized at the unit and then trapped. The under sized riser should enter the top of a facility suction header.

HOT GAS DEFROST

For rooms below freezing (HGU), a unique hot gas pan is utilized. Two seam welded stainless steel sheets are hydraulically expanded forming a coil-less waffle pattern. Pans contain insulation between the waffle and a standard mill galvanized cover. Pan to coil piping, check valve, and balancing valve are factory installed. To prevent material warpage, two waffle pans are piped together. The seam between the pans is covered and sealed to prevent condensate from flowing between the pans.

CAUTION

- It is recommended that all hot gas defrost systems be arranged so that the hot gas supply header is free from condensed liquid and the cycle includes a coil pump-down period with fans-on prior to opening the hot gas solenoid valve.
- Do not back-flow through liquid balancing valves during hot gas defrost cycles. If necessary, a bypass check should be used. Liquid condensate must be allowed to leave the coil or defrost will be retarded by lack of flow.
- Defrost condensate relief devices must be located below the liquid connection using RB or FL feeds, or below the suction connection when using RT or DX feeds. A float drainer should be used with series piped units only as vapor will prevent complete and proper defrost cycles.
- Do not lift refrigerant condensate because defrost of the bottom of the coil will be retarded.
- When the defrost relief is piped in a fourth pipe to the system intercooler or controlled pressure receiver, the defrost relief regulator may require over sizing because its pressure differential is lower.
- With multiple evaporators, each is provided with a defrost relief check valve and the regulator is in the common header. The regulator and the common defrost relief header must be sized for the maxi-mum number of units being defrosted at one time.

MOTOR DATA

Motor Data – Approximate Full Load Amps				
Motor hp	230/3/60	460/3/60	575/3/60	38/3/50
1.0	2.8	1.4	1.2	1.7
1.5	4.2	2.1	1.7	2.2
2.0	5.6	2.8	2.2	3.0
3.0	8.2	4.1	3.4	3.9
5.0	13.4	6.7	5.4	7.0
7.5	20.4	10.2	8.2	10.4
10	28.4	14.2	11.4	13.56
15	38.8	19.4	15.5	21.0
20	48.0	24.0	19.1	28.0
25	60.0	30.0	24.2	34.0

External Motor Protection is required in all three phases. Overloads should be sized with allowance for 1.15 service factor and cold air density. Multiply nameplate FLA by 1.15 in 0°F, 1.17 in -10°F, and 1.2 in -20°F spaces to correct for air density. A motor's ability to dissipate heat in cold ambients increases at a faster rate than the resultant increase in horsepower.

ELECTRIC DEFROST

See page 34 for heater data.

Model 1F-09

Fan Performance Total Static Pressure – inches water gauge																							
Face Velocity	CFM	0.25"		0.38"		0.50"		0.75"		1.0"		1.25"		1.50"		1.75"		2.0"		2.25"		2.50"	
		RPM	bhp	RPM	bhp	RPM	bhp	RPM	bhp	RPM	bhp	RPM	bhp	RPM	bhp	RPM	bhp	RPM	bhp	RPM	bhp	RPM	bhp
450	4180	350	0.50	389	0.65	438	0.8	515	0.9	583	1.1	650	1.5	710	1.7								
500	4650	373	0.68	405	0.85	451	1.0	527	1.2	591	1.4	654	1.7	712	2.0	766	2.2						
550	5100	391	0.85	420	0.85	464	1.2	537	1.4	600	1.7	659	2.0	716	2.2	768	2.5	820	2.8				
600	5550	405	1.0	440	1.3	477	1.4	547	1.7	609	1.9	665	2.2	720	2.5	772	2.8	822	3.1	871	3.4	917	3.8
650	6050	420	1.1	457	1.5	492	1.6	561	1.9	621	2.2	676	2.5	729	2.9	777	3.2	828	3.5	873	3.8	919	4.2
700	6550	445	1.6	482	1.8	510	1.9	576	2.3	636	2.6	689	2.9	740	3.2	788	3.6	834	3.9	878	4.3	920	4.6
750	7000	475	1.9	500	2.1	530	2.2	593	2.6	649	3.0	702	3.3	752	3.7	797	4.0	842	4.4	885	4.8	928	5.2
800	7450					540	2.4	610	2.5	660	3.3	715	3.4	760	3.8	805	4.2	855	4.6	891	5.0	935	5.3

3/4" Tube D Physical Data												
CFM 600 FPM	Face Area sq ft	Rows Deep	Nominal Capacity BTUH/°F-TD			Physical Data						
			3 FPI Frosted	4 FPI Frosted	6 FPI Wet	Total Surface sq ft		Coil Volume cu ft	Weight lb			Water Defrost gpm
						3 FPI	4 FPI		Steel	CU/AL	Alum	
5500	9.3	6	6070	3440	3920	669	828	1.0	1190	860	775	10
		8	3880	4230	4740	892	1104	1.3	1330	980	890	10
		10	4550	4930	5550	1115	1380	1.6	1600	1150	1040	20
		12	5170	5390	6070	1338	1656	1.9	1800	1300	1200	20

3/4" Tube D Optimum Horsepower Performance																			
Base Model	Motor hp	3 Fins per Inch									4 Fins per Inch								
		0" ESP			1/4" ESP			1/2" ESP			0" ESP			1/4" ESP			1/2" ESP		
		BTUH/ °F TD	Face Velocity	CFM	BTUH/ °F TD	Face Velocity	CFM	BTUH/ °F TD	Face Velocity	CFM	BTUH/ °F TD	Face Velocity	CFM	BTUH/ °F TD	Face Velocity	CFM	BTUH/ °F TD	Face Velocity	CFM
1F-096	1	3100	610	5670							3410	585	5440						
1F-098		3830	585	5440							4070	565	5250						
1F-0910		4400	565	5250							4650	550	5110						
1F-0912		4800	545	5070							4840	530	4930						
1F-096	1.5	3270	685	6370	3110	620	5760	3000	570	5300	3600	665	6180	3470	610	5670	3350	560	5200
1F-098		4110	665	6180	3890	610	5670	3720	560	5200	4440	655	6090	4210	595	5530	3980	545	5070
1F-0910		4820	655	6090	4540	595	5530	4310	545	5010	5110	640	5950	4790	580	5390	4580	535	4980
1F-0912		5360	635	5900	5100	585	5440	4700	535	4980	5510	615	5720	5160	570	5300	4990	525	4880
1F-096	2	3380	730	6790	3300	700	6510	3200	655	6090	3760	715	6650	3670	690	6410	3530	640	5950
1F-098		4260	715	6650	4110	690	6410	4000	640	5950	4580	700	6510	4500	670	6230	4320	630	5860
1F-0910		5000	700	6510	4880	670	6230	4680	630	5860	5340	690	6420	5210	660	6130	5020	620	5770
1F-0912		5600	690	6420	5480	660	6140	5230	615	5720	5810	680	6320	5650	645	6000	5470	610	5670
1F-096	3							3530	780	7250							3860	760	7070
1F-098								4420	760	7070							4760	740	6880
1F-0910								5130	740	6880							5440	720	6700
1F-0912								5780	730	6790							5970	710	6600

Model 1G-20

Fan Performance Total Static Pressure – inches water gauge																							
Face Velocity	CFM	0.25"		0.38"		0.50"		0.75"		1.0"		1.25"		1.50"		1.75"		2.0"		2.25"		2.50"	
		RPM	bhp	RPM	bhp	RPM	bhp	RPM	bhp	RPM	bhp	RPM	bhp	RPM	bhp	RPM	bhp	RPM	bhp	RPM	bhp	RPM	bhp
450	9000	310	1.5	339	1.7	366	1.9	417	2.4	465	2.9	510	3.4	554	3.9	598	4.5						
500	10000	331	2.0	358	2.2	384	2.4	432	2.9	476	3.4	519	3.9	560	4.8	600	5.1	640	5.8	678	6.4		
550	11000	354	2.5	379	2.7	403	2.9	448	3.5	490	4.0	530	4.6	569	5.3	607	5.8	644	6.5	679	7.1	715	7.9
600	12000	377	3.1	400	3.3	422	3.7	462	4.3	505	4.8	543	5.4	580	6.0	616	6.7	650	7.4	684	8.0	718	8.8
650	13000	401	3.8	422	4.1	444	4.4	483	5.0	522	5.6	558	6.3	590	6.9	628	7.6	660	8.3	692	9.0	724	9.8
700	14000	425	4.6	445	4.9	465	5.3	505	6.0	541	6.6	575	7.4	608	8.0	641	8.7	672	9.4	702	10.2	732	10.9
750	15000	450	5.6	469	6.0	487	6.4	519	7.1	558	7.8	581	8.5	624	9.1	655	9.9	685	10.7	714	11.4	744	12.3
800	16000					515	7.4	555	8.1	585	8.7	610	9.2	640	10.0	671	11.2	700	12.1	728	12.8	756	13.7

3/4" Tube D Physical Data												
CFM 600 FPM	Face Area sq ft	Rows Deep	Nominal Capacity BTUH/°F-TD			Physical Data						
			3 FPI Frosted	4 FPI Frosted	6 FPI Wet	Total Surface sq ft		Coil Volume cu ft	Weight lb			Water Defrost gpm
						3 FPI	4 FPI		Steel	CU/AL	Alum	
12000	20.0	6	6600	7400	8430	1439	1780	1.9	2450	1700	1500	15
		8	8300	9100	10190	1918	2374	2.5	2750	1850	1650	15
		10	9800	10600	11500	2398	2968	3.2	3300	2000	1800	31
		12	11120	11600	13050	2878	3561	3.8	3700	2200	1950	31

3/4" Tube D Optimum Horsepower Performance																			
Base Model	Motor hp	3 Fins per Inch									4 Fins per Inch								
		0" ESP			1/4" ESP			1/2" ESP			0" ESP			1/4" ESP			1/2" ESP		
		BTUH/ °F TD	Face Velocity	CFM	BTUH/ °F TD	Face Velocity	CFM	BTUH/ °F TD	Face Velocity	CFM	BTUH/ °F TD	Face Velocity	CFM	BTUH/ °F TD	Face Velocity	CFM	BTUH/ °F TD	Face Velocity	CFM
1G-206	3	6560	590	11800	6480	575	11500	6100	520	10400	7340	585	11700	7200	560	11200	6880	515	10300
1G-208		8240	585	11700	8000	560	11200	7560	515	10300	8860	575	11500	8600	550	11000	8160	505	10100
1G-2010		9560	575	11500	9300	550	11000	8860	505	10100	10200	570	11400	9900	540	10800	9300	495	9900
1G-2012		10540	560	11200	10100	535	10700	9540	495	9900	11000	550	11000	10200	520	10400	9500	485	9700
1G-206	5	7160	710	14200	7000	680	13600	6960	645	12900	7900	690	13800	7760	670	13400	7580	635	12700
1G-208		9000	690	13800	8880	670	13400	8560	635	12700	9760	680	13600	9600	660	13200	9260	625	12500
1G-2010		10600	680	13600	10400	660	13200	10060	625	12500	11300	670	13400	11100	650	13000	10760	615	12300
1G-2012		11830	665	13300	11580	640	12800	11250	615	12300	12320	660	13200	12060	635	12700	11600	600	12000
1G-206	7.5	8150	810	162 00	7600	780	15600	7460	755	15100	9030	800	16000	8380	770	15400	8200	740	14800
1G-208		10290	800	16000	9580	770	15400	9360	740	14800	11150	790	15800	10380	760	15200	10060	725	14500
1G-2010		12000	790	15800	11200	760	15200	10920	725	14500	12790	780	15600	11920	750	15000	11660	715	14300
1G-2012		12830	770	15400	12500	740	14800	12310	715	14300	13400	760	15200	13100	735	14700	12760	700	14000

Model 1C-24

Fan Performance Total Static Pressure – inches water gauge																							
Face Velocity	CFM	0.25"		0.38"		0.50"		0.75"		1.0"		1.25"		1.50"		1.75"		2.0"		2.25"		2.50"	
		RPM	bhp	RPM	bhp	RPM	bhp	RPM	bhp	RPM	bhp	RPM	bhp	RPM	bhp	RPM	bhp	RPM	bhp	RPM	bhp	RPM	bhp
450	10800	239	1.4	268	1.6	295	1.9	345	2.4	391	3.0	435	3.7	567	5.0	605	5.7	642	6.3	679	6.8	715	7.7
500	12000	252	1.8	280	2.	305	2.3	352	2.9	396	3.5	437	4.2	476	4.9	616	6.7	650	7.4	684	8.0	118	8.8
550	13200	266	2.2	293	2.5	316	2.7	361	3.4	402	4.0	441	4.7	478	5.5	515	6.3	662	8.5	694	9.3	726	10.0
600	14400	281	2.6	306	3.0	331	3.4	371	4.0	410	4.7	447	5.4	483	6.2	517	7.0	551	7.9	583	8.8	736	11.4
650	15600	295	3.2	319	3.6	339	3.9	382	4,7	420	5.4	455	6.3	489	7,0	522	7.9	554	8.8	585	9.7	615	10.6
700	1680 0	311	3.8	333	4.3	355	4.6	395	5.4	430	6.3	464	7.1	497	7.8	527	8.8	558	9.7	588	10.6	617	11.7
750	18000	327	4.6	348	5.0	370	5.1	406	6.3	441	7.2	474	8.0	506	9.0	536	9.9	565	10.8	594	11.8	621	12.7
800	19200					382	6.1	419	7.0	453	7.9	485	9.1	515	10.1	544	11.0	572	12.0	600	13.0	626	14.0

G

Letter at the end of the table shows an alternate fan wheel selection for maximum efficiency — Alternate Model 1G-24

3/4" Tube D Physical Data												
CFM 600 FPM	Face Area sq ft	Rows Deep	Nominal Capacity BTUH/°F-TD			Physical Data						
			3 FPI Frosted	4 FPI Frosted	6 FPI Wet	Total Surface sq ft		Coil Volume cu ft	Weight lb			Water Defrost gpm
						3 FPI	4 FPI		Steel	CU/AL	Alum	
14400	24.1	6	7920	8880	10120	1727	2136	2.3	2900	1950	1800	15
		8	9960	10920	12230	2302	2849	3.0	3300	2100	1900	15
		10	11760	12720	14000	2878	3561	3.8	3900	2300	2100	31
		12	13350	13920	15320	3454	4273	4.6	4400	2500	2300	31

3/4" Tube D Optimum Horsepower Performance																			
Base Model	Motor hp	3 Fins per Inch									4 Fins per Inch								
		0" ESP			1/4" ESP			1/2" ESP			0" ESP			1/4" ESP			1/2" ESP		
		BTUH/ °F TD	Face Velocity	CFM	BTUH/ °F TD	Face Velocity	CFM	BTUH/ °F TD	Face Velocity	CFM	BTUH/ °F TD	Face Velocity	CFM	BTUH/ °F TD	Face Velocity	CFM	BTUH/ °F TD	Face Velocity	CFM
1C-246	3	8110	630	15100	7730	580	13900	7350	530	12700	8950	610	14600	8690	565	13600	8260	515	12300
1C-248		10030	610	14600	9760	565	13600	9160	515	12300	10870	595	14300.	10320	550	13200	9790	505	12100
1C-2410		11710	595	14300	11160	550	13200	10630	505	12100	12450	585	14000	11880	540	13800	11160	495	11900
1C-2412		12980	575	13800	12130	535	12800	11300	495	11900	13250	565	13600	12240	520	12500	11400	485	11600
1C-246	5	9050	765	18300	8640	720	17300	8260	655	15700	9910	750	18000	9550	695	16700	9170	645	155 00
1C-248		11300	750	18000	10900	695	16700	10390	645	15500	12190	735	17600	11620	670	16100	11160	630	15100
1C-2410		13200	735	17600	12600	670	16100	12120	630	15100	14080	725	17400	13320	650	15600	12960	620	14800
1C-2412		14700	710	17000	14050	650	15600	13550	620	14900	15310	700	16800	144 00	630	15100	14100	610	14600
1C-246	7.5							9240	800	19200							10100	775	18600
1C-248								11540	775	18600							12360	750	18000
1C-2410								13340	750	18000							14110	730	17500
1C-2412								15000	730	17500							15410	710	17000

Model 1D-28

Fan Performance Total Static Pressure – inches water gauge																								
Face Velocity	CFM	0.25"		0.38"		0.50"		0.75"		1.0"		1.25"		1.50"		1.75"		2.0"		2.25"		2.50"		
		RPM	bhp	RPM	bhp	RPM	bhp	RPM	bhp	RPM	bhp	RPM	bhp	RPM	bhp	RPM	bhp	RPM	bhp	RPM	bhp	RPM	bhp	
450	12600	185	1.3	210	1.6	299	1.9	277	2.5	360	3.6	397	4.1	433	4.7									
500	14000	194	1.6	218	1.9	239	2.2	281	2.9	320	3.6	402	4.8	435	5.5	468	6.2	500	7.0					
550	15400	204	2.0	227	2.4	247	2.8	285	3.4	322	4.2	357	5.0	440	6.3	471	7.0	501	7.8	530	8.7			
600	16800	215	2.5	236	2.8	255	3.2	292	3.9	326	4.8	359	5.6	391	6.5	476	8.0	505	8.9	532	9.7	560	10.6	E
650	18200	225	3.0	245	3.4	265	3.8	299	4.6	331	5.4	363	6.3	393	7.2	423	8.3	510	10.0	537	10.9	563	12.0	
700	19600	236	3.6	256	4.0	274	4.4	306	5.3	338	6.2	368	7.1	397	8.1	425	9.1	452	10.2	479	11.2	567	13.2	
750	21000	248	4.3	266	4.7	280	5.0	315	6.0	345	7.0	373	8.0	409	9.0	428	10.1	454	11.1	480	12.3	505	13.4	
800	22400	4.3				293	5.8	324	6.7	353	8.0	380	9.0	407	10.1	432	11.1	457	12.3	482	13.4	506	14.6	

Letter at the end of the table shows an alternate fan wheel selection for maximum efficiency — Alternate Model 1E-28

3/4" Tube D Physical Data												
CFM 600 FPM	Face Area sq ft	Rows Deep	Nominal Capacity BTUH/°F-TD			Physical Data						
			3 FPI Frosted	4 FPI Frosted	6 FPI Wet	Total Surface sq ft		Coil Volume cu ft	Weight lb			Water Defrost gpm
						3 FPI	4 FPI		Steel	CU/AL	Alum	
16800	28.1	6	9420	10360	11810	2014	2492	2.7	3200	2200	2100	15
		8	11620	12740	14260	2685	3324	3.6	3700	2450	2250	15
		10	13720	13720	16200	3357	4155	4.5	4500	2600	2400	31
		12	15580	15580	17860	4029	4985	5.4	5300	2800	2600	31

3/4" Tube D Optimum Horsepower Performance																			
Base Model	Motor hp	3 Fins per Inch									4 Fins per Inch								
		0" ESP			1/4" ESP			1/2" ESP			0" ESP			1/4" ESP			1/2" ESP		
		BTUH/ °F TD	Face Velocity	CFM	BTUH/ °F TD	Face Velocity	CFM	BTUH/ °F TD	Face Velocity	CFM	BTUH/ °F TD	Face Velocity	CFM	BTUH/ °F TD	Face Velocity	CFM	BTUH/ °F TD	Face Velocity	CFM
1D-286	2	9020	565	15800							10000	545	15300						
1D-288		11000	545	15300							11760	530	14800						
1D-2810		12740	530	14800							13500	515	14400						
1D-2812		13650	510	14300							13720	500	14000						
1D-286	3	9580	645	18100	9180	590	16500				10580	630	17600	10190	575	16100			
1D-288		11900	630	17600	11420	575	16100				12820	610	17100	12180	560	15700			
1D-2810		13860	610	17100	13160	560	15700				14840	600	16800	14000	550	15400			
1D-2812		15400	590	16500	14580	550	15400				15820	580	16200	14840	540	15100			
1D-286	5	10610	775	21700	10050	715	20000	9710	655	18300	11590	755	21100	11260	705	19700	10700	645	18100
1D-288		13240	755	21100	12740	705	19700	12120	645	18100	14280	740	20700	13750	690	19300	13100	635	17800
1D-2810		15460	740	20700	14950	690	19300	14220	635	17800	16460	730	20400	15900	675	18900	15200	625	17500
1D-2812		17150	710	19900	16630	670	18800	15930	625	17500	17860	700	19600	17250	660	18500	16460	610	17100
1D-286	7.5							10750	795	22200							11730	770	21600
1D-288								13410	770	21600							14360	745	20900
1D-2810								15510	745	20900							16380	720	20200
1D-2812								17470	735	20600							17860	700	19600

Model 1A-32

Fan Performance Total Static Pressure – inches water gauge																								
Face Velocity	CFM	0.25"		0.38"		0.50"		0.75"		1.0"		1.25"		1.50"		1.75"		2.0"		2.25"		2.50"		
		RPM	bhp	RPM	bhp	RPM	bhp	RPM	bhp	RPM	bhp	RPM	bhp	RPM	bhp	RPM	bhp	RPM	bhp	RPM	bhp	RPM	bhp	
450	14400	159	1.5	181	1.9	201	2.2	240	2.9	353	3.9	391	4.6	483	6.2	517	7.0	551	7.9	583	8.8			
500	16000	166	1.9	187	2.3	206	2.6	243	3.4	277	4.3	394	5.4	429	6.3	462	7.4	555	9.0	586	9.9	616	10.4	C
550	17600	174	2.3	194	2.7	212	3.2	246	4.0	279	4.9	310	5.9	432	7.1	464	8.0	494	9.0	591	11.3	620	12.4	
600	19200	182	2.9	202	3.3	219	3.7	251	4.7	282	5.5	311	6.6	339	7.7	467	9.1	496	10.2	525	11.1	626	14.0	
650	20800	191	3.4	209	3.9	232	4.6	257	5.4	286	6.4	314	7.4	340	8.5	366	9.7	500	11.4	527	12.5	554	13.5	
700	22400	200	4.2	217	4.6	233	4.9	265	6.5	291	7.4	317	8.4	343	9.5	368	10.7	392	12.0	532	13.9	557	15.0	B
750	24000	209	4.9	226	5.5	241	5.8	270	7.1	297	8.3	322	9.5	346	10.6	370	11.8	393	13.1	416	14.4	562	16.8	
800	25600					249	6.7	277	7.8	303	9.3	327	10.6	351	11.8	373	13.1	395	14.3	417	15.8	438	17.2	

Letter at the end of the table shows an alternate fan wheel selection for maximum efficiency — Alternate Model 1B-32 – 1C-32

3/4" Tube D Physical Data												
CFM 600 FPM	Face Area sq ft	Rows Deep	Nominal Capacity BTUH/°F-TD			Physical Data						
			3 FPI Frosted	4 FPI Frosted	6 FPI Wet	Total Surface sq ft		Coil Volume cu ft	Weight lb			Water Defrost gpm
						3 FPI	4 FPI		Steel	CU/AL	Alum	
19200	32.1	6	10560	11840	13490	2302	2848	3.2	3600	2450	2250	15
		8	13280	14560	16310	3070	3798	4.3	4300	2600	2400	15
		10	15680	16960	18750	3837	4748	5.4	5000	2800	2650	31
		12	17800	18560	20520	4605	5697	6.5	5700	3100	2900	31

3/4" Tube D Optimum Horsepower Performance																			
Base Model	Motor hp	3 Fins per Inch									4 Fins per Inch								
		0" ESP			1/4" ESP			1/2" ESP			0" ESP			1/4" ESP			1/2" ESP		
		BTUH/ °F TD	Face Velocity	CFM	BTUH/ °F TD	Face Velocity	CFM	BTUH/ °F TD	Face Velocity	CFM	BTUH/ °F TD	Face Velocity	CFM	BTUH/ °F TD	Face Velocity	CFM	BTUH/ °F TD	Face Velocity	CFM
1A-326	3	10690	565	19700	10210	555	17800				11840	600	19200	11360	540	17200			
1A-328		13280	545	19200	12480	540	17200				14240	580	18600	13440	530	16900			
1A-3210		15360	530	18600	14560	530	16900				16320	570	18200	15420	515	16500			
1A-3212		16870	510	17900	15800	520	16600				17280	550	17600	15840	505	16200			
1A-326	5	11780	645	23700	11300	690	22000	10780	625	20000	13020	725	23200	12380	665	21200	11900	605	19400
1A-328		14780	630	23200	14140	665	21200	13340	605	19400	15870	710	22700	15100	645	20640	14400	590	18800
1A-3210		17310	610	22700	16420	645	20600	15520	590	18800	18490	700	22400	17540	635	20320	16420	575	18400
1A-3212		19200	590	21900	18200	625	20000	17470	580	18600	19810	665	21300	18940	615	19700	17660	565	18100
1A-326	7.5				12320	800	25600	11780	740	23700				13470	775	24800	12960	720	23000
1A-328					15390	775	24800	14720	720	23000				16540	755	24200	15770	700	22400
1A-3210					17860	755	24200	17220	700	22400				18940	740	23700	18360	690	22000
1A-3212					19900	730	23400	19100	680	21800				20640	720	23000	19870	670	21400

Model 2F-18

Fan Performance Total Static Pressure – inches water gauge																							
Face Velocity	CFM	0.25"		0.38"		0.50"		0.75"		1.0"		1.25"		1.50"		1.75"		2.0"		2.25"		2.50"	
		RPM	bhp	RPM	bhp	RPM	bhp	RPM	bhp	RPM	bhp	RPM	bhp	RPM	bhp	RPM	bhp	RPM	bhp	RPM	bhp	RPM	bhp
450	8360	350	1.0	389	1.3	438	1.6	515	1.8	583	2.2	650	3.0	710	3.4								
500	9300	373	1.4	405	1.7	451	2.0	527	2.4	591	2.8	654	3.4	712	4.0	766	4.4						
550	10200	391	1.7	420	2.0	464	2.4	537	2.8	600	3.4	659	4.0	716	4.4	758	5.0	820	5.6				
600	11100	405	2.0	440	2.6	477	2.8	547	3.4	609	3.8	665	4.4	720	5.0	772	5.6	822	6.2	871	6.8	917	7.6
650	12100	420	2.2	457	3.0	492	3.2	561	3.8	621	4.4	676	5.0	729	5.8	777	6.4	828	7.0	873	7.6	919	8.4
700	13000	445	3.2	482	3.8	510	3.8	576	4.6	636	5.2	689	5.8	740	6.4	788	7.2	834	7.8	878	8.6	920	9.2
750	14000	475	3.8	500	4.2	530	4.4	593	5.2	649	6.0	702	6.6	752	7.4	797	8.0	842	8.8	885	9.6	928	10.2
800						540	4.8	610	5.6	660	6.6	715	6.8	760	7.6	805	8.4	855	9.2	891	10.0	935	10.6

3/4" Tube D Physical Data												
CFM 600 FPM	Face Area sq ft	Rows Deep	Nominal Capacity BTUH/°F-TD			Physical Data						
			3 FPI Frosted	4 FPI Frosted	6 FPI Wet	Total Surface sq ft		Coil Volume cu ft	Weight lb			Water Defrost gpm
						3 FPI	4 FPI		Steel	CU/AL	Alum	
11100	18.6	6	6140	6880	7840	1338	1656	2.0	1900	1300	1100	21
		8	7720	8460	9480	1784	2208	2.6	2400	1600	1500	21
		10	9120	9880	10850	2230	2760	3.2	2900	2000	1800	42
		12	10350	10790	11870	2677	3311	3.8	3400	2300	2200	42

3/4" Tube D Optimum Horsepower Performance																			
Base Model	Motor hp	3 Fins per Inch									4 Fins per Inch								
		0" ESP			1/4" ESP			1/2" ESP			0" ESP			1/4" ESP			1/2" ESP		
		BTUH/ °F TD	Face Velocity	CFM	BTUH/ °F TD	Face Velocity	CFM	BTUH/ °F TD	Face Velocity	CFM	BTUH/ °F TD	Face Velocity	CFM	BTUH/ °F TD	Face Velocity	CFM	BTUH/ °F TD	Face Velocity	CFM
2F-186	2	6190	610	11300							6840	590	11000						
2F-188		7680	590	11000							8150	565	10500						
2F-1810		8800	565	10500							9300	550	10200						
2F-1812		9490	540	10040							9670	530	9860						
2F-186	3	6510	680	12600	6290	630	11700	5930	580	10800	7200	665	12400	6940	610	11300	6750	570	10600
2F-188		8220	665	12300	7770	610	11300	7540	570	10600	8780	645	12000	8460	600	11200	8050	555	10300
2F-1810		9540	645	12000	9110	600	11200	8700	555	10300	10140	630	11700	9650	585	10800	9260	545	10100
2F-1812		10660	630	11720	10190	585	10880	9590	545	10140	11030	615	11440	10320	570	10600	9770	535	9950
2F-186	5				7070	780	14500	6660	710	13200				7700	755	14000	7480	705	13100
2F-188					8800	755	14000	8460	705	13100				9390	730	13600	9130	690	12800
2F-1810					10200	730	13600	9930	690	12800				10840	715	13300	10600	680	12600
2F-1812					11390	710	13210	11040	670	12460				11870	700	13020	11510	665	12370

Models 2G-33 2G-31

Fan Performance Total Static Pressure – inches water gauge																							
Face Velocity	CFM	0.25"		0.38"		0.50"		0.75"		1.0"		1.25"		1.50"		1.75"		2.0"		2.25"		2.50"	
		RPM	bhp	RPM	bhp	RPM	bhp	RPM	bhp	RPM	bhp	RPM	bhp	RPM	bhp	RPM	bhp	RPM	bhp	RPM	bhp	RPM	bhp
450	14800	280	1.8	310	2.4	341	2.6	399	3.4	453	4.2												
500	16400	295	2.2	320	2.8	353	3.2	407	4.0	458	5.0	506	6.0	553	7.0								
550	18200	320	3.0	345	3.4	368	4.0	418	4.8	466	5.8	511	6.8	555	8.0	597	9.0						
600	19800	331	3.8	355	4.2	380	4.8	430	5.8	475	6.8	518	7.8	559	9.0	600	10.0						
650	21400	350	4.4	371	5.0	396	5.6	443	6.6	486	7.6	527	8.8	566	10.0	605	11.2	642	12.6	681	13.4		
700	23200	370	5.6	390	6.4	415	7.0	460	8.2	499	9.0	538	10.0	575	11.2	612	12.6	648	14.0	682	15.4	716	16.8
750	24800	387	6.6	410	7.4	430	8.2	476	9.4	512	10.2	550	11.4	586	12.8	620	12.8	654	15.4	688	16.8	720	18.2
800	27200					460	9.6	496	11.5	530	12.4	568	13.6	602	15.0	635	16.4	667	17.8	698	19.4	729	21.0

2G-33 – 3/4" Tube D Physical Data											
CFM 600 FPM	Face Area sq ft	Rows Deep	Nominal Capacity BTUH/°F-TD			Physical Data					
			3 FPI	4 FPI	6 FPI	Total Surface sq ft		Coil Volume	Weight lb			Water Defrost
			Frosted	Frosted	Wet	3 FPI	4 FPI	cu ft	Steel	CU/AL	Alum	gpm
19800	33.0	6	11080	12200	13900	2374	2938	3.2	4000	2600	2300	26
		8	13700	15020	16820	3164	3916	4.2	4900	2900	2500	26
		10	16180	17500	19100	3956	4896	5.2	5900	3200	2700	52
		12	18360	19140	21050	4749	5875	6.2	6800	3500	2900	52

2G-33 – 3/4" Tube D Optimum Horsepower Performance																			
Base Model	Motor hp	3 Fins per Inch									4 Fins per Inch								
		0" ESP			1/4" ESP			1/2" ESP			0" ESP			1/4" ESP			1/2" ESP		
		BTUH/ °F TD	Face Velocity	CFM	BTUH/ °F TD	Face Velocity	CFM	BTUH/ °F TD	Face Velocity	CFM	BTUH/ °F TD	Face Velocity	CFM	BTUH/ °F TD	Face Velocity	CFM	BTUH/ °F TD	Face Velocity	CFM
2G-336	3	10440	570	18800							11810	550	18100						
2G-338		13030	550	18100							14030	540	17800						
2G-3310		15180	540	17800							16170	530	17500						
2G-3312		16290	520	17200							16500	510	16800						
2G-336	5	11480	670	22100	11050	620	20500	10440	570	18800	12640	650	21400	12310	610	20100	11850	555	18300
2G-338		14350	650	21400	13790	610	20100	13130	555	18300	15440	635	20900	14950	595	19600	14120	545	18000
2G-3310		16760	635	20900	16100	595	19600	15270	545	18000	17820	620	20500	17000	580	19100	16170	530	17500
2G-3312		18630	620	20500	17840	575	19000	16670	535	17700	19270	605	20000	18310	570	18800	17530	520	17200
2G-336	7.5	12370	760	25000	11810	710	23400	11570	665	21900	13530	740	24400	13200	700	23100	12670	655	21600
2G-338		15440	740	24400	14950	700	23100	14580	655	21600	16500	720	23800	16100	680	22400	15510	640	21100
2G-3310		17980	720	23800	17490	680	22400	16830	640	21100	19080	700	23100	18640	670	22100	17990	630	20800
2G-3312		20040	700	23100	19530	665	21900	18770	625	20600	20720	685	22600	20260	655	21600	19640	620	20500
2G-336	10				12540	780	25700	12240	750	24700				13830	770	25400	13530	740	24400
2G-338					15810	770	25400	15440	740	24400				16990	750	24800	16660	730	24000
2G-3310					18340	750	24800	18080	730	24000				19530	740	24400	19300	720	23800
2G-3312					20520	730	24100	20210	710	23400				21290	720	23800	21050	700	23100

2G-31 – 1" Tube E Physical Data										
CFM 600 FPM	Face Area sq ft	Rows Deep	Nominal Capacity BTUH/°F-TD		Physical Data					
			3 FPI	4 FPI	Total Surface sq ft		Coil Volume	Weight lb		Water Defrost gpm
			Frosted	Frosted	3 FPI	4 FPI	cu ft	Steel	Alum	
18600	31.0	6	10740	12060	2302	2867	5.4	4100	2350	26
		8	13650	14820	3070	3822	6.8	5100	2550	26
		10	16080	17270	3837	4778	8.1	6100	2750	52

2G-31 – 1" Tube E Optimum Horsepower Performance																			
Base Model	Motor hp	3 Fins per Inch									4 Fins per Inch								
		0" ESP			1/4" ESP			1/2" ESP			0" ESP			1/4" ESP			1/2" ESP		
		Basic	FPM	CFM	Basic	FPM	CFM	Basic	FPM	CFM	Basic	FPM	CFM	Basic	FPM	CFM	Basic	FPM	CFM
2G-316	3	10480	580	18000							11810	570	17700						
2G-318		13230	565	17500							14110	555	17200						
2G-3110		15370	555	17200							16120	540	16700						
2G-316	5	11690	700	21700	11310	655	20300	10330	610	18900	12870	690	21400	12430	645	20000	12060	600	18600
2G-318		14700	680	21100	14060	640	19800	13510	595	18400	15750	670	20800	15130	630	19500	14570	585	18100
2G-3110		17180	665	20600	16600	630	19500	15890	585	18100	18070	650	20200	17420	610	18900	16620	570	17600
2G-316	7.5	12660	800	24800	12400	765	23700	11380	725	22500	13890	790	24500	13490	755	23400	13140	715	22200
2G-318		15320	785	24300	15470	750	23200	15020	710	22000	17110	775	24000	16620	740	22900	16060	700	21700
2G-3110		18500	770	23800	18080	735	22800	17630	695	21500	19410	750	23300	18970	715	22200	18570	680	21100
2G-316	10					845	26200	12720	810	25100				14260	835	25900	14010	800	24800
2G-318						830	25700	16020	795	24600				17640	820	25400	17170	780	24200
2G-3110						810	25100	18600	775	24000				20000	790	24500	19530	760	23600

Model 2C-39

Fan Performance Total Static Pressure – inches water gauge																								
Face Velocity	CFM	0.25"		0.38"		0.50"		0.75"		1.0"		1.25"		1.50"		1.75"		2.0"		2.25"		2.50"		
		RPM	bhp	RPM	bhp	RPM	bhp	RPM	bhp	RPM	bhp	RPM	bhp	RPM	bhp	RPM	bhp	RPM	bhp	RPM	bhp	RPM	bhp	
450	17800	221	2.0	253	2.4	282	2.8	337	3.8	385	5.0	510	6.8	554	7.8	598	9.0							
500	19800	231	2.2	261	2.8	289	3.2	340	4.2	389	5.4	426	6.6	560	9.0	600	15.3	640	11.6	678	12.8			
550	21800	241	2.8	270	3.4	297	4.0	345	5.0	391	6.2	435	7.4	460	8.6	607	17.4	644	13.0	679	14.2	715	15.8	
600	23800	252	3.4	280	4.0	305	4.6	352	5.8	396	7.0	437	8.4	476	9.8	616	13.4	650	14.8	684	16.0	718	17.6	G
650	25700	264	4.2	290	4,8	315	5.4	359	6.6	401	7.8	440	9.2	478	10.8	515	12.4	660	16.6	692	18.0	724	19.6	
700	27700	276	4.8	302	5.6	327	6.4	368	7.6	407	9.0	445	10.4	481	12.0	516	13.4	550	15.2	702	20.4	732	21.8	
750	29700	288	5.8	313	6.6	335	7.2	377	8.6	415	10.0	451	11.6	486	13.2	519	14.8	552	16.6	584	18.6	615	20.4	
800	31700					345	8.0	398	9.6	423	11.4	458	13.0	491	14.8	524	16.4	555	18.0	586	20.0	616	21.8	

Letter at the end of the table shows an alternate fan wheel selection for maximum efficiency — Alternate Model 2G-39

3/4" Tube D Physical Data												
CFM 600 FPM	Face Area sq ft	Rows Deep	Nominal Capacity BTUH/°F-TD			Physical Data						
			3 FPI	4 FPI	6 FPI	Total Surface sq ft		Coil Volume	Weight lb			Water Defrost
			Frosted	Frosted	Wet	3 FPI	4 FPI	cu ft	Steel	CU/AL	Alum	gpm
23800	39.6	6	13190	14660	16710	2848	3525	3.8	4700	3200	2900	26
		8	16400	18000	20160	3798	4701	5.0	5600	3500	3100	26
		10	19400	20980	22900	4748	5877	6.2	6500	3700	3300	52
		12	22030	22970	25070	5698	7050	7.4	7400	4000	3500	52

3/4" Tube D Optimum Horsepower Performance																			
Base Model	Motor hp	3 Fins per Inch									4 Fins per Inch								
		0" ESP			1/4" ESP			1/2" ESP			0" ESP			1/4" ESP			1/2" ESP		
		BTUH/ °F TD	Face Velocity	CFM	BTUH/ °F TD	Face Velocity	CFM	BTUH/ °F TD	Face Velocity	CFM	BTUH/ °F TD	Face Velocity	CFM	BTUH/ °F TD	Face Velocity	CFM	BTUH/ °F TD	Face Velocity	CFM
2C-396	3	12610	580	23000							14260	560	22200						
2C-398		15840	560	22200							17030	550	21800						
2C-3910		18410	550	21800							19400	530	21000						
2C-3912		19800	530	21000							20200	520	20600						
2C-396	5	13980	690	27300	13380	630	24900	12530	570	22600	15360	670	26500	14770	610	24100	14180	550	21800
2C-398		17580	670	26500	16550	610	24100	15640	550	21800	18770	650	25700	17940	595	23500	16630	530	21000
2C-3910		20390	650	25700	19320	595	23500	18000	530	21000	21700	635	25100	20390	580	23000	19050	515	20400
2C-3912		22690	630	25000	21620	580	23000	19550	520	20600	23280	610	24200	21700	560	22200	19800	510	20200
2C-396	7.5	15210	795	31500	14570	740	29300	13860	680	26900	16750	780	30900	16040	720	28500	15320	665	26300
2C-398		19130	780	30900	18220	720	28500	17500	665	26300	20550	760	30000	19520	700	27700	18770	650	25700
2C-3910		22180	760	30000	21300	700	27700	20390	650	25700	23520	745	29500	22650	685	27100	21780	640	25300
2C-3912		24540	725	28700	23640	680	27000	22690	630	24900	25500	715	28300	24590	670	26600	23560	620	24600
2C-396	10				15640	840	33300	15050	780	30900				17150	810	32000	16430	760	30100
2C-398					19560	810	32000	18810	760	30100				21030	790	31300	20200	740	29300
2C-3910					22650	790	31300	21860	740	29300				24110	780	30900	23280	730	28900
2C-3912					25410	770	30600	24460	720	28600				26290	750	29700	25420	710	28100

1" Tube E Physical Data										
CFM 600 FPM	Face Area sq ft	Rows Deep	Nominal Capacity BTUH/°F-TD		Physical Data					
			3 FPI	4 FPI	Total Surface sq ft		Coil Volume	Weight lb		Water Defrost
			Frosted	Frosted	3 FPI	4 FPI	cu ft	Steel	Alum	gpm
23300	38.9	6	13470	15130	2889	3597	6.7	4900	2950	26
		8	17120	18590	3852	4797	8.4	5900	3150	26
		10	20180	21670	4815	5996	10.2	6900	3350	52

1" Tube E Optimum Horsepower Performance																			
Base Model	Motor hp	3 Fins per Inch									4 Fins per Inch								
		0" ESP			1/4" ESP			1/2" ESP			0" ESP			1/4" ESP			1/2" ESP		
		Basic	FPM	CFM	Basic	FPM	CFM	Basic	FPM	CFM	Basic	FPM	CFM	Basic	FPM	CFM	Basic	FPM	CFM
2C-396	3	13270	585	22800							14860	570	22200						
2C-398		16650	565	22000							17630	550	21500						
2C-3910		19130	545	21300							20090	530	20700						
2C-396	5	14710	700	27300	14150	645	25200	13310	590	23000	16190	690	26900	15520	635	24800	14940	580	22600
2C-398		18490	680	26500	17450	625	24400	16890	575	22400	19730	665	25900	18800	615	24000	17820	560	21800
2C-3910		21530	660	25700	20480	610	23800	19420	560	21800	22660	645	25100	21570	595	23200	20200	535	20900
2C-396	7.5	16050	815	31800	15520	760	29600	14790	710	27700	17630	800	31200	16930	750	29300	16380	700	27300
2C-398		20070	790	30800	19340	740	28900	18580	690	26900	21450	770	30000	20590	725	28300	19970	680	26300
2C-3910		23240	765	29800	22510	720	28100	21820	675	26300	24340	745	29100	23670	700	27300	22930	660	25700
2C-396	10				16410	845	33000	15930	800	31200				17900	830	32400	17390	785	30600
2C-398					20600	820	32000	19910	775	30200				22000	805	31400	21260	760	29600
2C-3910					23770	800	31200	23160	760	29600				24920	780	30400	24180	735	28700

Model 2G-40

Fan Performance Total Static Pressure – inches water gauge																							
Face Velocity	CFM	0.25"		0.38"		0.50"		0.75"		1.0"		1.25"		1.50"		1.75"		2.0"		2.25"		2.50"	
		RPM	bhp	RPM	bhp	RPM	bhp	RPM	bhp	RPM	bhp	RPM	bhp	RPM	bhp	RPM	bhp	RPM	bhp	RPM	bhp	RPM	bhp
450	18000	310	3.0	339	3.4	366	3.8	417	4.8	465	5.8	510	6.8	554	7.8	598	9.0						
500	20000	331	4.0	358	4.4	384	4.8	432	5.8	476	6.8	519	7.8	560	9.0	600	10.2	640	11.6	678	12.8		
550	22000	354	5.0	379	5.4	403	5.8	448	7.0	490	8.0	530	9.2	569	10.6	607	11.6	644	13.0	679	14.2	715	15.8
600	24000	371	6.2	400	6.6	422	7.4	462	8.6	505	9.6	543	10.8	580	12.0	616	13.4	650	14.8	684	16.0	718	17.6
650	26000	401	7.6	422	8.2	444	8.8	483	10.0	522	11.2	558	12.6	590	13.8	628	15.2	660	16.6	692	18.0	724	19.6
700	28000	425	9.2	445	9.8	465	10.6	505	12.0	541	13.2	575	14.8	608	16.0	641	16.4	672	18.8	702	20.4	732	21.8
750	30000	450	10.2	469	12.0	487	12.8	519	14.2	558	15.6	581	17.0	624	18.2	655	19.7	685	21.7	714	22.8	744	24.6
800	32000					515	14.8	555	16.2	585	17.4	610	18.4	640	20.0	671	22.1	700	24.2	728	25.6	756	27.4

3/4" Tube D Physical Data											
CFM 600 FPM	Face Area sq ft	Rows Deep	Nominal Capacity BTUH/°F-TD			Physical Data					
			3 FPI	4 FPI	6 FPI	Total Surface sq ft		Coil Volume	Weight lb			Water Defrost
			Frosted	Frosted	Wet	3 FPI	4 FPI	cu ft	Steel	CU/AL	Alum	gpm
24000	40.1	6	13200	14800	16860	2878	3560	4.0	4750	3250	2950	31
		8	16600	18200	20380	3836	4748	5.3	5600	3550	3200	31
		10	19600	21200	23000	4796	5936	6.6	6600	3900	3400	62
		12	21360	23200	25170	5756	7121	7.9	7600	4200	3600	62

3/4" Tube D Optimum Horsepower Performance																			
Base Model	Motor hp	3 Fins per Inch									4 Fins per Inch								
		0" ESP			1/4" ESP			1/2" ESP			0" ESP			1/4" ESP			1/2" ESP		
		BTUH/ °F TD	Face Velocity	CFM	BTUH/ °F TD	Face Velocity	CFM	BTUH/ °F TD	Face Velocity	CFM	BTUH/ °F TD	Face Velocity	CFM	BTUH/ °F TD	Face Velocity	CFM	BTUH/ °F TD	Face Velocity	CFM
2G-406	5	12540	560	22400							14320	550	22200						
2G-408		15800	550	22000							17000	540	21600						
2G-4010		18400	540	21600							19600	530	21200						
2G-4012		20000	530	21200							20400	520	20800						
2G-406	7.5	13600	640	25600	13320	610	24400	12620	565	22600	15120	630	25200	14800	600	24000	14400	560	22400
2G-408		17000	630	25200	16600	600	24000	16000	560	22400	18400	620	24800	18000	590	23600	17200	550	22000
2G-4010		20000	620	24800	19400	590	23600	18600	550	22000	21320	605	24200	20600	580	23200	19800	540	21600
2G-4012		22330	605	24200	21830	580	23200	20420	540	21600	22920	590	23600	22200	570	22800	20800	530	21200
2G-406	10	14560	730	29200	13960	675	27000	13720	650	26000	16200	720	28800	15480	665	26600	15160	635	25400
2G-408		18400	720	28800	17680	665	26600	17070	635	25400	19840	710	28400	19080	655	26200	18520	625	25000
2G-4010		21640	710	28400	20720	655	26200	20120	625	25000	23200	705	28200	22200	650	26000	21520	615	24600
2G-4012		24000	685	27400	23170	640	25600	22420	610	24400	24840	670	26800	24120	635	25400	23200	600	24000
2G-406	15				15200	780	31200	14840	750	30000				16680	765	30600	16360	735	29400
2G-408					19080	765	30600	18640	735	29400				20600	750	30000	20120	725	29000
2G-4010					22240	750	30000	21840	725	29000				23600	735	29400	23320	715	28600
2G-4012					25000	740	29600	24630	715	28600				25920	725	29000	25520	700	28000

1" Tube E Physical Data									
CFM 600 FPM	Face Area sq ft	Rows Deep	Nominal Capacity BTUH/°F-TD		Physical Data					
			3 FPI	4 FPI	Total Surface sq ft		Coil Volume	Weight lb		Water Defrost
			Frosted	Frosted	3 FPI	4 FPI	cu ft	Steel	Alum	gpm
22700	37.8	6	13090	14700	2808	3496	6.2	4900	3000	31
		8	16640	18070	3743	4661	7.9	5800	3200	31
		10	19610	21050	4679	5826	9.6	6800	3400	62

1" Tube E Optimum Horsepower Performance																			
Base Model	Motor hp	3 Fins per Inch									4 Fins per Inch								
		0" ESP			1/4" ESP			1/2" ESP			0" ESP			1/4" ESP			1/2" ESP		
		Basic	FPM	CFM	Basic	FPM	CFM	Basic	FPM	CFM	Basic	FPM	CFM	Basic	FPM	CFM	Basic	FPM	CFM
2G-406	5	12780	580	21900							14550	585	21800						
2G-408		16250	570	21500							17390	565	21400						
2G-4010		18820	560	21200							19850	550	20800						
2G-406	7.5	13950	670	25300	13640	640	24200	13210	605	22900	15350	665	25100	15010	630	23800	14700	600	22700
2G-408		17650	660	24900	17030	630	23800	16600	595	22500	18820	650	24600	18260	620	23400	17880	590	22300
2G-4010		20670	650	24600	20040	620	22400	19370	585	22100	21850	640	24100	21170	605	22900	20370	575	21700
2G-406	10	14650	735	27800	14290	705	26600	13990	675	25500	16140	725	27400	15880	700	26400	15350	665	25200
2G-408		18550	725	27300	18000	695	26200	17730	665	25100	15990	715	27000	19430	685	25900	18940	655	24800
2G-4010		21660	710	26800	21340	685	25900	20790	655	24800	22940	700	26500	22530	675	25400	21960	645	24400
2G-406	15				15590	820	31000	15400	795	30100				17200	810	30600	16860	785	29700
2G-408					19690	805	30500	19370	780	29500				21170	795	30100	20790	770	29100
2G-4010					23000	795	30000	22560	770	29100				24150	780	29500	23740	755	28600

Model 2H-46

Fan Performance Total Static Pressure – inches water gauge																								
Face Velocity	CFM	0.25"		0.38"		0.50"		0.75"		1.0"		1.25"		1.50"		1.75"		2.0"		2.25"		2.50"		
		RPM	bhp	RPM	bhp	RPM	bhp	RPM	bhp	RPM	bhp	RPM	bhp	RPM	bhp	RPM	bhp	RPM	bhp	RPM	bhp	RPM	bhp	
450	20000	177	2.0	205	2.4	230	2.8	279	4.2	353	5.2													
500	23000	184	2.4	210	2.8	234	3.4	280	4.6	356	6.0	395	7.2											
550	25400	192	2.8	216	3.4	239	4.0	282	5.4	360	6.8	397	8.2	433	9.6									
600	27700	201	3.8	224	4.2	245	4.6	286	6.0	324	7.6	401	9.2	435	10.6	468	12.2							
650	30000	210	4.2	231	4.8	251	5.4	290	6.8	327	8.4	362	10.0	439	12.0	470	13.6	500	14.8	530	16.8			E
700	32300	219	4.8	240	5.6	259	6.2	296	7.8	331	9.4	364	11.2	396	13.2	473	15.0	503	16.8	531	18.4	559	21.4	
750	34700	228	5.8	248	6.6	268	7.8	302	9.0	335	10.6	367	12.4	398	14.2	478	16.8	506	18.4	534	20.2	560	22.0	
800	37000					275	8.0	309	10.2	340	11.8	371	13.6	401	15.6	429	17.6	511	20.4	538	22.2	563	24.0	

Letter at the end of the table shows an alternate fan wheel selection for maximum efficiency — Alternate Model 2E-46

3/4" Tube D Physical Data												
CFM 600 FPM	Face Area sq ft	Rows Deep	Nominal Capacity BTUH/°F-TD			Physical Data						
			3 FPI	4 FPI	6 FPI	Total Surface sq ft		Coil Volume	Weight lb			Water Defrost
			Frosted	Frosted	Wet	3 FPI	4 FPI	cu ft	Steel	CU/AL	Alum	gpm
27700	46.2	6	15240	17100	19490	3324	4113	4.4	5200	3600	3400	26
		8	19180	21020	23540	4431	5485	5.8	6200	3900	3600	26
		10	22640	24480	27000	5539	6856	7.2	7500	4200	3900	52
		12	25700	26800	29560	6648	8225	8.6	8700	4500	4100	52

3/4" Tube D Optimum Horsepower Performance																			
Base Model	Motor hp	3 Fins per Inch									4 Fins per Inch								
		0" ESP			1/4" ESP			1/2" ESP			0" ESP			1/4" ESP			1/2" ESP		
		BTUH/ °F TD	Face Velocity	CFM	BTUH/ °F TD	Face Velocity	CFM	BTUH/ °F TD	Face Velocity	CFM	BTUH/ °F TD	Face Velocity	CFM	BTUH/ °F TD	Face Velocity	CFM	BTUH/ °F TD	Face Velocity	CFM
2H-466	3	14670	575	26600							16540	550	25400						
2H-468		18250	550	25400							19630	540	24900						
2H-4610		21250	540	24900							22640	530	24500						
2H-4612		22810	520	24000							22870	505	23300						
2H-466	5	16350	695	32100	15530	625	28900				17920	670	30900	17090	600	27700			
2H-468		20690	670	30900	19170	600	27700				21900	650	30000	20560	580	26800			
2H-4610		23790	650	30000	22180	580	26800				25180	630	29100	23470	565	26100			
2H-4612		26080	620	28600	24350	560	25900				26980	605	28000	24720	545	25200			
2H-466	7.5	17650	785	36300	16580	715	33000	16310	675	31200	19130	755	34900	18620	710	32800	17690	650	30000
2H-468		21850	755	34900	21110	710	32800	20260	650	30000	23330	730	33100	22730	695	32100	21480	630	29100
2H-4610		25320	730	33700	24760	695	32100	23330	630	29100	26930	715	33000	26430	685	31600	24720	610	28200
2H-4612		28300	710	32900	27340	665	30700	25800	605	28000	29150	690	31900	28230	650	30000	26470	590	27300
2H-466	10				17970	815	37600	17420	765	35300				19860	BOO	37000	18940	740	34200
2H-468					22640	800	37000	21620	740	34200				24530	790	36500	23100	720	33200
2H-4610					26430	790	36500	25180	720	33200				28130	780	36000	26750	705	32600
2H-4612					29310	755	34900	28060	700	32400				30260	735	34000	28880	680	31400

1" Tube E Physical Data										
CFM 600 FPM	Face Area sq ft	Rows Deep	Nominal Capacity BTUH/°F-TD		Physical Data					
			3 FPI	4 FPI	Total Surface sq ft		Coil Volume	Weight lb		Water Defrost
			Frosted	Frosted	3 FPI	4 FPI	cu ft	Steel	Alum	gpm
28000	46.7	6	16180	18170	3469	4319	8.0	5500	3450	26
		8	20560	22320	4625	5758	10.1	6600	3700	26
		10	24230	26010	5781	7198	12.2	8000	4000	52

1" Tube E Optimum Horsepower Performance																			
Base Model	Motor hp	3 Fins per Inch									4 Fins per Inch								
		0" ESP			1/4" ESP			1/2" ESP			0" ESP			1/4" ESP			1/2" ESP		
		Basic	FPM	CFM	Basic	FPM	CFM	Basic	FPM	CFM	Basic	FPM	CFM	Basic	FPM	CFM	Basic	FPM	CFM
2H-466	3	15500	560	26200							17560	550	25700						
2H-468		19450	545	25500							20590	530	24800						
2H-4610		22570	530	24700							23440	510	23800						
2H-466	5	17330	680	31700	16610	620	29000				18960	665	31100	18310	640	28400			
2H-468		21660	655	30600	20560	600	28000				23070	640	29900	21950	585	27300			
2H-4610		25150	635	29700	23930	585	27300				26480	620	28900	24900	565	26300			
2H-466	7.5	18920	785	36700	18100	735	34300	17330	680	31700	20550	770	36000	19850	720	33600	18960	665	31100
2H-468		23500	760	35500	22620	710	33200	21660	655	30700	25170	745	34800	24140	695	32400	23070	640	29900
2H-4610		27340	740	34500	26460	690	32200	25150	635	29700	28670	720	33600	27690	670	31300	26480	620	28900
2H-466	10				19220	815	38100	18580	760	35600				21110	800	37400	20270	750	35000
2H-468					24030	790	36900	23160	740	34600				25690	770	36000	24660	725	33800
2H-4610					27830	765	35800	26950	720	33600				29140	745	34800	28350	700	32700

Model 2C-48

Fan Performance Total Static Pressure – inches water gauge																								
Face Velocity	CFM	0.25"		0.38"		0.50"		0.75"		1.0"		1.25"		1.50"		1.75"		2.0"		2.25"		2.50"		
		RPM	bhp	RPM	bhp	RPM	bhp	RPM	bhp	RPM	bhp	RPM	bhp	RPM	bhp	RPM	bhp	RPM	bhp	RPM	bhp	RPM	bhp	
450	21600	239	2.8	268	3.2	295	3.8	345	4.8	391	6.0	435	7.4	567	10.0	605	11.4	642	12.6	679	13.6	715	15.4	
500	24000	252	3.6	280	4.0	305	4.6	352	5.8	396	7.0	437	8.4	476	9.8	616	13.4	650	14.8	684	16.0	718	17.6	
550	26400	266	4.4	293	5.0	316	5.4	361	6.8	402	8.0	441	9.4	478	11.0	515	12.6	662	17.0	694	18.6	726	20.0	G
600	28800	281	5.2	306	6.0	331	6.8	371	8.0	410	9.4	447	10.8	483	12.4	517	14.0	551	15.8	583	17.6	736	22.8	
650	31200	295	6.4	319	7.2	339	7.8	382	9.4	420	10.8	455	12.6	489	14.0	522	15.8	554	17.6	585	19.4	615	21.2	
700	33600	311	7.6	333	8.6	355	9.2	395	10.8	430	12.6	464	14.2	497	15.6	527	17.6	558	19.4	588	21.2	617	23.4	
750	36000	327	9.2	348	10.0	370	10.1	406	12.6	441	14.4	474	16.0	506	18.0	536	19.8	565	21.6	594	23.6	621	25.4	
800	38400					382	12.2	419	14.0	453	15.7	485	18.2	515	20.2	544	22.0	572	24.0	600	26.0	626	28.0	

Letter at the end of the table shows an alternate fan wheel selection for maximum efficiency — Alternate Model 2G-48

3/4" Tube D Physical Data												
CFM 600 FPM	Face Area sq ft	Rows Deep	Nominal Capacity BTUH/°F-TD			Physical Data						
			3 FPI	4 FPI	6 FPI	Total Surface sq ft		Coil Volume	Weight lb			Water Defrost
			Frosted	Frosted	Wet	3 FPI	4 FPI	cu ft	Steel	CU/AL	Alum	gpm
28800	48.1	6	15840	17760	20240	3454	4276	4.6	5300	3700	3500	31
		8	19920	21840	24460	4604	5698	6.0	6300	4000	3700	31
		10	23520	25440	28000	5756	7121	7.4	7600	4300	4000	62
		12	26700	27840	30640	6907	8545	8.8	8800	4600	4200	62

3/4" Tube D Optimum Horsepower Performance																			
Base Model	Motor hp	3 Fins per Inch									4 Fins per Inch								
		0" ESP			1/4" ESP			1/2" ESP			0" ESP			1/4" ESP			1/2" ESP		
		BTUH/ °F TD	Face Velocity	CFM	BTUH/ °F TD	Face Velocity	CFM	BTUH/ °F TD	Face Velocity	CFM	BTUH/ °F TD	Face Velocity	CFM	BTUH/ °F TD	Face Velocity	CFM	BTUH/ °F TD	Face Velocity	CFM
2C-486	5	15840	600	28800	14850	540	25900				17620	585	28000	16800	530	25400			
2C-488		19780	585	28000	18480	530	25400				21120	570	27400	19820	515	24700			
2C-4810		22800	570	27400	21500	515	24700				24140	555	26600	22750	505	24200			
2C-4812		25000	550	26400	23400	510	24500				25200	535	25700	23280	495	23800			
2C-486	7.5	16800	680	32600	16320	640	30700	15440	590	28300	18620	670	32100	18000	620	29800	17470	575	27600
2C-488		21310	670	32100	20160	620	29800	19580	575	27600	22900	655	31400	21940	605	29000	21020	565	27100
2C-4810		24860	655	31400	23660	605	29000	22700	565	27100	26540	645	31000	25300	595	28600	24000	550	26400
2C-4812		27500	630	30200	26400	590	28300	25000	550	26400	28420	615	29500	26880	575	27600	25440	540	25900
2C-486	10	18100	765	36700	17280	720	34500	16510	655	31400	19870	755	36200	19340	710	34100	18380	650	31200
2C-488		22700	755	36200	21940	710	34100	20880	650	31200	24620	745	35800	23620	695	33400	22460	635	30500
2C-4810		26590	745	35800	25730	695	33400	24380	635	30500	28320	735	35300	27460	685	32900	26060	625	30000
2C-4812		29300	705	33800	28500	670	32200	27100	620	29800	30290	690	33100	29330	650	31200	28220	610	29300
2C-486	15							18430	795	38200							20210	775	37200
2C-488								23090	775	37200							24820	755	36200
2C-4810								26780	755	36200							28510	745	35800
2C-4812								29950	735	35300							30960	720	34600

1" Tube E Physical Data										
CFM 600 FPM	Face Area sq ft	Rows Deep	Nominal Capacity BTUH/°F-TD		Physical Data					
			3 FPI	4 FPI	Total Surface sq ft		Coil Volume	Weight lb		Water Defrost
			Frosted	Frosted	3 FPI	4 FPI	cu ft	Steel	Alum	gpm
28400	47.2	6	16350	18360	3506	4365	7.8	5600	3550	31
		8	20780	22560	4674	5820	9.9	6600	3750	31
		10	24490	26290	5843	7275	12.0	8000	4050	62

1" Tube E Optimum Horsepower Performance																			
Base Model	Motor hp	3 Fins per Inch									4 Fins per Inch								
		0" ESP			1/4" ESP			1/2" ESP			0" ESP			1/4" ESP			1/2" ESP		
		Basic	FPM	CFM	Basic	FPM	CFM	Basic	FPM	CFM	Basic	FPM	CFM	Basic	FPM	CFM	Basic	FPM	CFM
2C-486	5	16250	595	28100	15520	545	25800				18170	585	27600	17610	540	25400			
2C-488		20530	580	27400	19370	535	25300				21810	570	26900	20720	525	24800			
2C-4810		23750	570	26800	22670	525	24700				24920	555	26200	23690	510	24000			
2C-486	7.5	17570	690	32500	17130	645	30400	16500	605	28500	19350	680	32000	18790	635	30000	18310	595	28100
2C-488		22190	670	31700	21260	630	29700	20680	590	27800	23790	660	31100	22800	620	29300	22040	580	27400
2C-4810		25960	655	31000	25050	620	29200	24040	580	27300	27280	640	30300	26290	600	28400	25160	565	26600
2C-486	10	18680	755	35600	17950	715	33700	17470	675	31800	20440	745	35100	19920	705	33200	19160	665	31400
2C-488		23310	735	34700	22480	695	32900	22040	660	31100	24780	720	34100	24260	685	32300	23510	650	30600
2C-4810		27240	720	34000	26550	680	32200	25670	645	30500	28740	705	33200	27990	670	31600	27140	635	29900
2C-486	15							19220	795	37600							21050	785	37100
2C-488								24190	780	36800							25960	770	36300
2C-4810								28123	765	36100							29550	750	35400

Model 2H-54

Fan Performance Total Static Pressure – inches water gauge																								
Face Velocity	CFM	0.25"		0.38"		0.50"		0.75"		1.0"		1.25"		1.50"		1.75"		2.0"		2.25"		2.50"		
		RPM	bhp	RPM	bhp	RPM	bhp	RPM	bhp	RPM	bhp	RPM	bhp	RPM	bhp	RPM	bhp	RPM	bhp	RPM	bhp	RPM	bhp	
450	23800	188	2.6	213	3.2	236	4.2	281	4.8	357	6.4	396	7.6	431	9.4									
500	26500	197	3.2	220	3.8	242	4.4	284	5.8	323	7.2	399	8.8	434	10.0	467	12.4							
550	29100	207	4.0	229	4.6	249	5.2	289	6.6	326	8.2	361	9.8	437	11.8	469	13.0	500	14.6					
600	31700	217	4.8	238	5.4	257	6.2	294	7.6	330	9.2	363	11.0	396	12.8	473	14.8	502	16.2	531	18.0			
650	34400	228	5.8	248	6.4	266	6.9	301	8.8	335	10.6	367	12.4	398	14.2	478	16.8	506	18.2	534	20.0	560	21.8	E
700	37000	239	7.0	258	7.8	275	8.1	309	10.2	341	12.0	371	13 .8	401	15.8	429	17.8	457	20.0	538	22.4	564	24.0	
750	39700	251	8.4	269	9.2	286	9.6	318	11.8	348	13.6	377	15.6	406	17.6	433	19.6	459	22.0	544	25.2	568	27.0	
800	42300					296	11.2	327	12.9	356	15.4	384	17.4	411	19.4	437	22.4	462	24.0	551	28.0	575	30.0	

Letter at the end of the table shows an alternate fan wheel selection for maximum efficiency – Alternate Model 2E-54

3/4" Tube D Physical Data												
CFM 600 FPM	Face Area sq ft	Rows Deep	Nominal Capacity BTUH/°F-TD			Physical Data						
			3 FPI	4 FPI	6 FPI	Total Surface sq ft		Coil Volume	Weight lb			Water Defrost
			Frosted	Frosted	Wet	3 FPI	4 FPI	cu ft	Steel	CU/AL	Alum	gpm
31700	52.9	6	17450	19570	22170	3798	4701	5.0	6100	4200	3800	26
		8	21980	24070	26900	5064	6269	6.6	7200	4500	4200	26
		10	25900	28040	30890	6330	7837	8.2	8500	5000	4500	52
		12	29430	30680	33750	7598	9400	9.8	9800	5400	4800	52

3/4" Tube D Optimum Horsepower Performance																			
Base Model	Motor hp	3 Fins per Inch									4 Fins per Inch								
		0" ESP			1/4" ESP			1/2" ESP			0" ESP			1/4" ESP			1/2" ESP		
		BTUH/ °F TD	Face Velocity	CFM	BTUH/ °F TD	Face Velocity	CFM	BTUH/ °F TD	Face Velocity	CFM	BTUH/ °F TD	Face Velocity	CFM	BTUH/ °F TD	Face Velocity	CFM	BTUH/ °F TD	Face Velocity	CFM
2H-546	5	17670	615	32500	16580	560	29600				19570	600	31700	18800	540	28600			
2H-548		21950	600	31700	20630	540	28800				23700	585	30900	22110	525	27800			
2H-5410		25550	585	30900	23960	525	27800				26980	570	30100	25290	510	27000			
2H-5412		27880	560	29600	25570	505	26700				28300	545	28800	25660	495	26200			
2H-546	7.5	18850	705	37300	18250	660	34900	17460	600	31700	20890	690	36500	20100	640	33800	19410	585	30900
2H-548		23720	690	36500	22630	640	33800	21790	585	30900	25710	675	35700	24490	625	33000	23430	575	30400
2H-5410		27930	675	35700	26610	625	33000	25290	575	30400	29780	665	35200	28300	610	32300	26610	555	29400
2H-5412		30800	645	34100	29430	600	31700	27720	555	29400	31740	630	33300	30310	590	31200	28040	540	28600
2H-546	10	20050	775	41000	19730	755	39900	18520	680	36000	21950	760	40200	21580	730	38600	20370	660	34900
2H-548		25130	760	40200	24540	730	38600	23280	660	34900	27240	750	39700	26080	700	37000	24860	640	33900
2H-5410		29410	750	38700	28460	700	37000	27000	640	33900	31210	735	38900	30050	675	35700	28830	630	33300
2H-5412		32620	715	37800	31520	675	35700	30090	625	33100	33860	705	37300	32590	660	35000	31320	615	32600
2H-546	15							20740	825	43600							22690	795	42000
2H-548								25680	795	42000							27610	765	40500
2H-5410								29730	765	40800							31420	745	39400
2H-5412								33060	740	39200							34440	730	38700

1" Tube E Physical Data									
CFM 600 FPM	Face Area sq ft	Rows Deep	Nominal Capacity BTUH/°F-TD		Physical Data				
			3 FPI	4 FPI	Total Surface sq ft		Coil Volume	Weight lb		Water Defrost
			Frosted	Frosted	3 FPI	4 FPI	cu ft	Steel	Alum	gpm
32600	54.4	6	18840	21160	4041	5031	9.4	6500	3900	26
		8	23950	26000	5387	6708	11.8	7700	4300	26
		10	28220	30300	6734	8385	14.3	9200	4600	52

1" Tube E Optimum Horsepower Performance																			
Base Model	Motor hp	3 Fins per Inch									4 Fins per Inch								
		0" ESP			1/4" ESP			1/2" ESP			0" ESP			1/4" ESP			1/2" ESP		
		Basic	FPM	CFM	Basic	FPM	CFM	Basic	FPM	CFM	Basic	FPM	CFM	Basic	FPM	CFM	Basic	FPM	CFM
2H-546	5	18730	595	32400	17890	545	29600				20940	585	31800	20180	535	29100			
2H-548		23670	580	31500	22150	530	28800				25020	565	30800	23720	520	28200			
2H-5410		27260	565	30700	25840	515	28100				28560	550	29900	27090	505	27400			
2H-546	7.5	20190	685	37300	19630	640	34800	18730	595	32400	22250	675	36400	21600	630	34300	20940	585	31800
2H-548		25570	670	36400	24340	625	34000	23670	580	31600	27250	655	35600	26220	615	33400	25130	570	31000
2H-5410		29920	655	35600	28560	610	33200	27260	565	30700	31280	635	34600	30080	595	32400	28560	550	29900
2H-546	10	21360	750	40800	20630	710	38600	20020	665	36200	23450	740	40200	22850	700	38100	21980	660	35800
2H-548		26860	735	39900	25910	695	37700	25010	650	35400	28560	720	39100	27850	680	36900	26870	640	34800
2H-5410		31280	715	38900	30430	675	36800	29300	635	34600	33020	700	38100	31990	660	36000	30840	620	33800
2H-546	15							22100	790	43000							24150	780	42400
2H-548								27770	775	42100							29650	760	41300
2H-5410								32190	755	41200							33840	740	41300

Model 2D-56

Fan Performance Total Static Pressure – inches water gauge																								
Face Velocity	CFM	0.25"		0.38"		0.50"		0.75"		1.0"		1.25"		1.50"		1.75"		2.0"		2.25"		2.50"		
		RPM	bhp	RPM	bhp	RPM	bhp	RPM	bhp	RPM	bhp	RPM	bhp	RPM	bhp	RPM	bhp	RPM	bhp	RPM	bhp	RPM	bhp	
450	25200	185	2.6	210	3.2	233	3.8	277	5.0	360	7.2	397	8.2	433	9.4									
500	28000	194	3.2	218	3.8	239	4.4	281	5.8	320	7.2	402	9.6	435	11.0	468	12.4	500	14.0					
550	30800	204	4.0	227	4.8	247	5.6	285	6.8	322	8.4	357	10.0	440	12.6	471	14.0	501	15.6	530	17.4			
600	33600	215	5.0	236	5.6	255	6.4	292	7.8	326	9.6	359	11.2	391	13.0	476	16.0	505	17.8	532	19.4	560	21.2	E
650	36400	225	6.0	245	6.8	265	7.6	299	9.2	331	10.8	363	12.6	393	14.4	423	16.6	510	20.0	537	21.8	563	24.0	
700	39200	236	7.2	256	8.0	274	8.8	306	10.6	338	12.4	368	14.2	397	16.2	425	18.2	452	20.4	479	22.4	567	26.4	
750	42000	248	8.6	266	9.4	280	10.0	315	12.0	345	14.0	373	16.0	401	18.0	428	20.2	454	22.2	480	24.6	505	26.8	
800	44800					293	11.5	324	13.4	353	16.0	380	18.0	407	20.2	432	22.2	457	24.6	482	26.8	506	29.2	

Letter at the end of the table shows an alternate fan wheel selection for maximum efficiency — Alternate Model 2E-56

3/4" Tube D Physical Data												
CFM 600 FPM	Face Area sq ft	Rows Deep	Nominal Capacity BTUH/°F-TD			Physical Data						
			3 FPI	4 FPI	6 FPI	Total Surface sq ft		Coil Volume	Weight lb			Water Defrost
			Frosted	Frosted	Wet	3 FPI	4 FPI	cu ft	Steel	CU/AL	Alum	gpm
33600	56.2	6	18480	20720	23620	4028	4984	5.4	6200	4200	4000	31
		8	23240	25480	28520	5370	6648	7.2	7300	4600	4400	31
		10	27440	29680	32400	6714	8310	9.0	8700	5100	4800	62
		12	31150	32480	35730	8058	9970	10.8	10000	5500	5100	62

3/4" Tube D Optimum Horsepower Performance																			
Base Model	Motor hp	3 Fins per Inch									4 Fins per Inch								
		0" ESP			1/4" ESP			1/2" ESP			0" ESP			1/4" ESP			1/2" ESP		
		BTUH/ °F TD	Face Velocity	CFM	BTUH/ °F TD	Face Velocity	CFM	BTUH/ °F TD	Face Velocity	CFM	BTUH/ °F TD	Face Velocity	CFM	BTUH/ °F TD	Face Velocity	CFM	BTUH/ °F TD	Face Velocity	CFM
2D-566	5	18590	605	33900							20660	595	33300						
2D-568		23180	595	33300							25090	585	32800						
2D-5610		27050	585	32800							28730	575	32200						
2D-5612		29340	555	31100							29680	540	30200						
2D-566	7.5	19720	705	39500	19040	640	35800	18010	590	33000	22120	690	38600	21110	625	35000	20330	570	31900
2D-568		25200	690	38600	23690	625	35000	22680	570	31900	27330	680	38100	25700	615	34400	24360	560	31400
2D-5610		29680	680	38100	27890	615	34400	26200	560	31400	31640	670	37500	29850	605	33900	27720	540	30200
2D-5612		32430	640	35800	30980	595	33300	29170	550	30900	33600	630	35300	31640	580	32500	29120	530	29700
2D-566	10	21170	770	43100	20610	740	41400	19490	670	37500	23180	755	42200	22790	725	40600	21440	650	36400
2D-568		26490	755	42200	25870	725	40600	24360	650	36400	28730	745	41700	27890	715	40000	26210	635	35600
2D-5610		31020	745	41700	30410	715	40000	28450	635	35600	33040	735	41100	32480	705	39500	30240	620	34700
2D-5612		34300	710	39800	33250	670	37500	31620	620	34800	35340	690	38600	34500	660	37000	32700	605	34000
2D-566	15				22000	830	46800	21560	800	44800				24360	820	45900	23580	775	43400
2D-568					27890	820	45900	26940	775	43400				30130	810	45300	28950	755	42300
2D-5610					32420	810	45300	31250	755	42300				34610	800	44800	33150	740	41400
2D-5612					36170	780	43700	34940	735	41300				37520	760	42600	36120	720	40500

1" Tube E Physical Data									
CFM 600 FPM	Face Area sq ft	Rows Deep	Nominal Capacity BTUH/°F-TD		Physical Data				
			3 FPI	4 FPI	Total Surface sq ft		Coil Volume	Weight lb		Water Defrost
			Frosted	Frosted	3 FPI	4 FPI	cu ft	Steel	Alum	gpm
34000	56.7	6	19640	22060	4211	5244	9.3	6600	4050	31
		8	24960	27100	5615	6991	11.8	7800	4500	31
		10	29410	31580	7019	8739	14.4	9300	4900	62

1" Tube E Optimum Horsepower Performance																			
Base Model	Motor hp	3 Fins per Inch									4 Fins per Inch								
		0" ESP			1/4" ESP			1/2" ESP			0" ESP			1/4" ESP			1/2" ESP		
		Basic	FPM	CFM	Basic	FPM	CFM	Basic	FPM	CFM	Basic	FPM	CFM	Basic	FPM	CFM	Basic	FPM	CFM
2D-566	5	19520	595	33800							21830	585	33200						
2D-568		24670	580	32900							26080	565	32100						
2D-5610		28410	565	32000							29770	550	31100						
2D-566	7.5	21100	690	39100	20460	640	36300	19350	590	33500	23190	675	38300	22510	630	35700	21720	580	32900
2D-568		26650	670	38000	25190	620	35200	24550	575	32600	28410	655	37100	27270	610	34600	26080	565	32100
2D-5610		31010	650	36900	29770	610	34600	28410	565	32000	32600	635	36100	31360	595	33700	29770	550	31100
2D-566	10	22440	755	42800	21500	710	40200	20870	665	37700	24440	740	42000	23810	700	39600	22850	655	37100
2D-568		28000	735	41600	26950	690	39200	25890	645	36600	29770	720	40800	28920	675	38300	27840	635	36100
2D-5610		32600	715	40600	31720	675	38300	30540	635	36000	34420	700	39700	33340	660	37400	32150	620	35100
2D-566	15				23630	830	47000	23030	790	44800				25860	815	46300	25170	780	44200
2D-568					29650	810	45900	28820	770	43700				31750	795	45000	30790	755	42900
2D-5610					34370	790	44800	33550	755	42700				36000	770	43700	35150	735	41700

Models 2A-64 2A-67

Fan Performance Total Static Pressure – inches water gauge																								
Face Velocity	CFM	0.25"		0.38"		0.50"		0.75"		1.0"		1.25"		1.50"		1.75"		2.0"		2.25"		2.50"		
		RPM	bhp	RPM	bhp	RPM	bhp	RPM	bhp	RPM	bhp	RPM	bhp	RPM	bhp	RPM	bhp	RPM	bhp	RPM	bhp	RPM	bhp	
450	28800	159	3.0	181	3.8	201	4.4	240	5.8	353	7.8	391	9.2	428	12.4	517	14.0	551	15.8	583	17.6			
500	32000	166	3.8	187	4.6	206	5.2	243	6.8	277	8.6	394	10.8	429	12.6	462	14.8	555	18.0	586	19.8	616	20.8	
550	35200	174	4.6	194	5.7	212	6.4	246	8.0	279	9.8	310	11.8	432	14.2	464	16.0	494	18.0	591	22.6	620	24.8	C
600	38400	182	5.8	202	6.6	219	7.4	251	9.4	282	11.0	311	13.2	339	15.4	467	18.2	496	20.4	525	22.2	626	28.0	
650	41600	191	6.8	209	7.8	232	9.2	257	10.8	286	12.8	314	14.8	340	17.0	366	19.4	500	22.8	527	25.0	554	27.0	
700	44800	200	8.4	217	9.2	233	9.9	265	13.0	291	14.8	317	16.8	343	19.0	368	21.1	392	24.0	532	27.8	557	30.0	B
750	48000	209	9.8	226	11.0	241	11.5	270	14.2	297	16.6	322	19.0	346	21.2	370	23.6	393	26.2	416	28.8	562	33.6	
800	51200					249	13.4	277	15.6	303	18.6	327	21.2	351	23.6	373	26.2	395	28.3	417	31.6	438	34.4	

Letter at the end of the table shows an alternate fan wheel selection for maximum efficiency — Alternate Models 2B-64, 2B-67, 2C-64 and 2C-67

2A-64 – 3/4" Tube D Physical Data												
CFM 600 FPM	Face Area sq ft	Rows Deep	Nominal Capacity BTUH/°F-TD			Physical Data						
			3 FPI	4 FPI	6 FPI	Total Surface sq ft		Coil Volume	Weight lb			Water Defrost
			Frosted	Frosted	Wet	3 FPI	4 FPI	cu ft	Steel	CU/AL	Alum	gpm
38400	64.2	6	21120	23680	26980	4604	5696	6.4	6900	4600	4400	31
		8	26560	29120	32620	6138	7596	8.6	8300	5100	4800	31
		10	31360	33920	37000	7674	9498	10.8	9900	5600	5200	62
		12	35600	37120	40830	9210	11394	13.0	11400	6100	5600	62

3/4" Tube D Optimum Horsepower Performance																			
Base Model	Motor hp	3 Fins per Inch									4 Fins per Inch								
		0" ESP			1/4" ESP			1/2" ESP			0" ESP			1/4" ESP			1/2" ESP		
		BTUH/ °F TD	Face Velocity	CFM	BTUH/ °F TD	Face Velocity	CFM	BTUH/ °F TD	Face Velocity	CFM	BTUH/ °F TD	Face Velocity	CFM	BTUH/ °F TD	Face Velocity	CFM	BTUH/ °F TD	Face Velocity	CFM
2A-646	5	20260	570	36500							23040	560	35800						
2A-648		25600	560	35800							27200	540	34600						
2A-6410		29440	540	34600							31360	530	33900						
2A-6412		31800	525	33600							32000	510	32600						
2A-646	7.5	22270	670	42900	21380	615	39400				24510	650	41600	23680	600	38400			
2A-648		27840	650	41600	26560	600	38400				30080	640	41000	28480	580	37100			
2A-6410		32640	640	41000	30720	580	37100				34560	620	39700	32640	570	36500			
2A-6412		35740	605	38700	33540	555	35500				38200	590	37800	34240	545	34900			
2A-646	10	23740	750	48000	22530	685	43800	21570	625	40000	26050	725	46400	24770	665	42600	23870	610	39000
2A-648		29570	725	46400	28290	665	42600	26750	610	39000	31680	705	45100	30210	645	41300	28990	595	38100
2A-6410		34500	705	45100	32830	645	41300	31230	595	38100	36610	685	43800	34880	630	40300	32960	580	37100
2A-6412		38000	670	42900	36670	630	40300	34940	580	37100	40940	655	41900	39470	615	39400	36800	565	36200
2A-646	15				24580	795	50800	23550	740	47400				26820	770	49300	25920	720	46100
2A-648					30670	770	49300	29440	720	46100				32640	740	47300	31550	700	44800
2A-6410					35330	740	47300	34430	700	44800				37630	730	46700	36610	685	43840
2A-6412					39540	720	46100	38200	680	43500				41090	710	45400	39740	670	42900

2A-67 – 1" Tube E Physical Data									
CFM 600 FPM	Face Area sq ft	Rows Deep	Nominal Capacity BTUH/°F-TD		Physical Data				
			3 FPI	4 FPI	Total Surface sq ft		Coil Volume	Weight lb		Water Defrost
			Frosted	Frosted	3 FPI	4 FPI	cu ft	Steel	Alum	gpm
39700	66.0	6	22860	25670	4902	6104	10.9	7400	4500	31
		8	29050	31550	6536	8138	13.8	9000	4900	31
		10	34240	36760	8170	10173	16.7	10700	5350	62

1" Tube E Optimum Horsepower Performance																			
Base Model	Motor hp	3 Fins per Inch									4 Fins per Inch								
		0" ESP			1/4" ESP			1/2" ESP			0" ESP			1/4" ESP			1/2" ESP		
		Basic	FPM	CFM	Basic	FPM	CFM	Basic	FPM	CFM	Basic	FPM	CFM	Basic	FPM	CFM	Basic	FPM	CFM
2A-676	5	21870	555	36800							24750	545	36100						
2A-678		27330	540	35700							29110	530	35000						
2A-6710		31950	530	34800							33130	510	33800						
2A-676	7.5	23850	640	42600	22760	595	39200				26200	630	41700	25280	580	38400			
2A-678		29570	625	41300	28620	575	38000				31750	610	40300	30360	565	37300			
2A-6710		34700	610	40300	32910	560	37100				36230	590	39100	34520	545	36100			
2A-676	10	24990	705	46600	24120	655	43400	23310	610	40300	27390	690	45700	26470	645	42700	25670	600	39700
2A•678		31350	685	45300	29980	640	42300	29030	585	39200	33530	670	44200	32080	625	41300	31020	585	38600
2A-6710		36770	670	44200	35250	625	41300	33670	580	38400	38480	650	43000	37090	610	40300	35180	565	37300
2A-676	15				26510	770	50800	25340	725	48000				28710	755	50000	27980	715	47300
2A-678					32980	750	49600	32020	710	46900				35180	735	48500	30490	695	45900
2A-6710					38560	735	48500	37590	695	45900				40390	715	47300	39530	680	44900

Models 3G-47 3G-50

Fan Performance Total Static Pressure – inches water gauge																							
Face Velocity	CFM	0.25"		0.38"		0.50"		0.75"		1.0"		1.25"		1.50"		1.75"		2.0"		2.25"		2.50"	
		RPM	bhp	RPM	bhp	RPM	bhp	RPM	bhp	RPM	bhp	RPM	bhp	RPM	bhp	RPM	bhp	RPM	bhp	RPM	bhp	RPM	bhp
450	22300	280	2.7	310	3.6	341	3.9	399	5.1	453	6.3												
500	24600	295	3.3	320	4.2	353	4.8	407	6.0	458	7.5	506	9.0	553	10.5								
550	27200	320	4.5	345	5.1	368	6.0	418	7.2	466	8.7	511	10.2	555	12.0	597	13.5						
600	29700	331	5.7	355	6.3	380	7.2	430	8.7	475	10.2	518	11.7	559	13.5	600	15.0	639	17.1	680	18.6	715	20.1
650	32200	350	6.6	371	7.5	396	8.4	443	9.9	486	11.4	527	13.2	566	15.0	605	16.8	642	18.9	681	20.1	716	22.8
700	34800	370	8.4	390	9.6	415	10.5	460	12.3	499	13.5	538	15.0	575	16.8	612	18.9	648	21.0	682	23.1	716	25.2
750	37200	387	9.9	410	11.1	430	12.3	476	14.1	512	15.3	550	17.1	586	19.2	620	21.0	654	23.1	688	25.2	720	27.1
800	40800					460	14.4	496	16.2	530	18.6	568	20.4	602	22.5	635	24.6	667	26.7	698	291	729	31.5

3G-50 – 3/4" Tube D Physical Data												
CFM 600 FPM	Face Area sq ft	Rows Deep	Nominal Capacity BTUH/°F-TD			Physical Data						
			3 FPI	4 FPI	6 FPI	Total Surface sq ft		Coil Volume	Weight lb			Water Defrost
			Frosted	Frosted	Wet	3 FPI	4 FPI	cu ft	Steel	CU/AL	Alum	gpm
29700	49.5	6	16330	18300	20850	3561	4407	4.8	5900	3900	3500	39
		8	20550	22530	25230	4746	5874	6.3	6600	4300	3800	39
		10	24270	26250	28650	5934	7344	7.8	7900	4600	4200	78
		12	27530	28710	31580	7123	8812	9.3	9000	4900	4400	78

3G-50 – 3/4" Tube D Optimum Horsepower Performance																			
Base Model	Motor hp	3 Fins per Inch									4 Fins per Inch								
		0" ESP			1/4" ESP			1/2" ESP			0" ESP			1/4" ESP			1/2" ESP		
		BTUH/ °F TD	Face Velocity	CFM	BTUH/ °F TD	Face Velocity	CFM	BTUH/ °F TD	Face Velocity	CFM	BTUH/ °F TD	Face Velocity	CFM	BTUH/ °F TD	Face Velocity	CFM	BTUH/ °F TD	Face Velocity	CFM
3G-506	5	15770	580	28700							17920	565	29000						
3G-508		19950	565	28000							21280	550	27200						
3G-5010		23020	550	27200							24500	540	26700						
3G-5012		25010	535	26400							25250	520	25800						
3G-506	7.5	17080	660	32700	16530	615	30400	15670	570	28200	18960	650	32200	18310	600	29700	17770	555	27500
3G-508		21480	650	32200	20540	600	29700	19700	555	27500	23260	640	31700	22270	590	29200	21180	545	27000
3G-5010		25250	640	31700	24000	590	29200	22920	545	27000	26980	630	31100	25490	580	28700	24400	535	
3G-5012		27950	620	30600	26760	575	28500	25010	535	26400	28910	605	30000	27320	565	27900	25490	525	26100
3G-506	10	18460	755	37200	17350	680	33700	16930	645	31900	20150	725	35900	19200	670	33200	18710	630	31200
3G-508		22870	725	35900	21980	670	33200	21040	630	31200	24400	700	34600	23760	660	32700	22720	615	30400
3G-5010		26630	700	34600	25740	660	32700	24650	615	30400	28210	680	33700	27470	650	32200	26380	605	29700
3G-5012		29550	680	33600	28820	645	32100	27640	605	30000	30590	660	32700	29850	635	31500	28560	595	29400
3G-506	15				18960	790	39100	18460	755	37400				20740	770	38100	20390	745	36900
3G-508					23710	770	38100	23210	745	36900				25690	760	37600	25150	735	36400
3G-5010					27720	760	37600	27220	735	36400				29500	750	37100	29060	725	35900
3G-5012					30940	740	36600	30580	720	35700				33220	730	36300	31680	705	34800

3G-47 – 1" Tube E Physical Data										
CFM 600 FPM	Face Area sq ft	Rows Deep	Nominal Capacity BTUH/°F-TD		Physical Data					
			3 FPI	4 FPI	Total Surface sq ft		Coil Volume	Weight lb		Water Defrost
			Frosted	Frosted	3 FPI	4 FPI	cu ft	Steel	Alum	gpm
27900	46.7	6	16180	18170	3469	4319	7.3	6100	3500	39
		8	20560	22320	4625	5758	9.4	6800	3800	39
		10	24230	26010	5781	7198	11.5	8200	4200	78

3G-47 – 1" Tube E Optimum Horsepower Performance																			
Base Model	Motor hp	3 Fins per Inch									4 Fins per Inch								
		0" ESP			1/4" ESP			1/2" ESP			0" ESP			1/4" ESP			1/2" ESP		
		Basic	FPM	CFM	Basic	FPM	CFM	Basic	FPM	CFM	Basic	FPM	CFM	Basic	FPM	CFM	Basic	FPM	CFM
3G-476	5	15940	590	27600							17840	575	27000						
3G-478		20220	575	26700							21480	565	26400						
3G-4710		23250	560	26100							24520	550	25500						
3G-476	7.5	17380	695	32400	16990	650	30300	16180	610	28500	19290	685	32100	18630	640	30000	18170	600	27900
3G-478		22150	680	31800	21140	635	29700	20460	590	27600	23630	665	30900	22700	625	29100	21810	580	27100
3G-4710		25880	665	30900	24760	620	29100	23640	575	27000	27230	650	30300	26250	610	28500	24890	565	26400
3G-476	10	18680	765	35700	17900	725	33900	17330	685	32100	20310	755	35100	19800	715	33300	19100	675	31500
3G-478		23250	745	34800	22620	710	33000	21910	665	31200	24890	735	34200	24140	695	32400	23400	655	30600
3G-4710		27140	730	34200	26560	695	32400	25690	655	30600	28580	715	33300	27970	680	31800	26990	640	30000
3G-476	15				19700	850	39600	19220	815	38100				21530	840	39300	21200	805	37500
3G-478					24810	830	38700	24130	795	37200				26480	815	38100	25970	785	36600
3G-4710					28800	815	38100	18780	775	36300				30210	795	37200	29560	765	35700

Model 3G-60

Fan Performance Total Static Pressure – inches water gauge																							
Face Velocity	CFM	0.25"		0.38"		0.50"		0.75"		1.0"		1.25"		1.50"		1.75"		2.0"		2.25"		2.50"	
		RPM	bhp	RPM	bhp	RPM	bhp	RPM	bhp	RPM	bhp	RPM	bhp	RPM	bhp	RPM	bhp	RPM	bhp	RPM	bhp	RPM	bhp
450	27000	310	4.5	339	5.1	366	5.7	417	7.2	465	8.7	510	10.2	554	11.7	598	13.5						
500	30000	331	6,0	358	6.6	384	7.2	432	8.7	476	10.2	519	11.7	560	13.5	600	15.3	640	17.4	678	19.2		
550	33000	354	7.5	379	8.1	403	8.7	448	10.5	490	12.0	530	13.8	569	15.9	607	17.4	644	19.5	679	21.3	715	23.7
600	36000	377	9.3	400	9,9	422	11.1	462	12.9	505	14.4	,,43	16.2	580	18.0	616	20.1	650	22.3	684	24.0	718	26.4
650	39000	401	11.4	422	12.3	444	13.2	483	15.0	522	16.8	558	18.9	590	20.7	628	22.8	660	24.9	692	27.0	724	29.4
700	42000	425	13.8	445	14.7	465	15.	505	18.0	541	20.0	575	22.2	608	24.0	641	26.1	672	28.2	702	30.6	732	32.7
750	45000	450	16.8	469	18.0	487	19.2	519	21.3	558	23.4	581	25.5	624	27.3	655	29.7	685	32.1	714	34.2	744	36.9
800	48000					515	23.2	555	24.3	585	26.1	610	27.6	640	30.0	671	33.6	700	36.3	728	36.3	728	38.4

3/4" Tube D Physical Data											
CFM 600 FPM	Face Area sq ft	Rows Deep	Nominal Capacity BTUH/°F-TD			Physical Data					
			3 FPI	4 FPI	6 FPI	Total Surface sq ft		Coil Volume	Weight lb		Water Defrost
			Frosted	Frosted	Wet	3 FPI	4 FPI	cu ft	Steel	CU/AL	Alum	gpm
36000	60.2	6	19800	22200	25290	4316	5342	5.7	6400	4350	3850	39
		8	24900	27300	30570	5755	7123	7.5	7700	4900	4250	39
		10	29400	31800	34500	7194	8904	9.3	9100	5200	4650	78
		12	33380	34800	38300	8634	10681	11.1	10500	5600	5000	78

3/4" Tube D Optimum Horsepower Performance																			
Base Model	Motor hp	3 Fins per Inch									4 Fins per Inch								
		0" ESP			1/4" ESP			1/2" ESP			0" ESP			1/4" ESP			1/2" ESP		
		BTUH/ °F TD	Face Velocity	CFM	BTUH/ °F TD	Face Velocity	CFM	BTUH/ °F TD	Face Velocity	CFM	BTUH/ °F TD	Face Velocity	CFM	BTUH/ °F TD	Face Velocity	CFM	BTUH/ °F TD	Face Velocity	CFM
3G-606	5	18800	560	33600							21480	550	33300						
3G-608		23700	550	33300							25500	540	32400						
3G-6010		27600	540	32400							29400	530	31800						
3G-6012		30000	530	31800							30600	520	31200						
3G-606	7.5	20400	640	38400	19050	575	34500	18930	565	33900	22500	620	37200	21780	570	34200	21480	550	33000
3G-608		25200	620	37200	24300	570	34200	23700	550	33000	27300	600	36000	26100	560	33600	25500	540	32400
3G-6010		29400	600	36000	28190	560	33600	27600	540	32400	31140	585	35100	30000	550	33000	29280	525	31500
3G-6012		32880	585	35100	31250	550	33000	29810	525	31500	33300	570	34200	31800	540	32400	30300	515	30900
3G-606	10	21500	715	42900	20940	675	40500	20580	650	39000	24120	705	42300	23220	665	39900	22740	635	38100
3G-608		27300	705	42300	26520	665	39900	25610	635	38100	29460	690	41400	28620	655	39300	27780	625	37500
3G-6010		32040	690	41400	30780	645	38700	30180	625	37500	34200	680	40800	33180	645	38700	32280	615	36900
3G-6012		35750	675	40500	34560	635	38100	33630	610	36600	36960	660	39600	36000	630	37800	34800	600	36000
3G-606	15				22140	745	44700	21600	720	43200				24600	740	44400	24180	710	42600
3G-608					28080	740	44400	27440	710	42600				30300	730	43800	29580	700	42000
3G-6010					32800	730	43800	32280	700	42000				35100	720	43200	34440	690	41400
3G-6012					36940	715	42900	36130	690	41400				38400	705	42300	37500	680	40800

1" Tube E Physical Data									
CFM 600 FPM	Face Area sq ft	Rows Deep	Nominal Capacity BTUH/°F-TD		Physical Data				
			3 FPI	4 FPI	Total Surface sq ft		Coil Volume	Weight lb		Water Defrost
			Frosted	Frosted	3 FPI	4 FPI	cu ft	Steel	Alum	gpm
35000	58.3	6	20190	22680	4430	5391	9.2	6700	3900	39
		8	25660	27870	5774	7189	11.8	8100	4300	39
		10	30240	32470	7217	8986	14.3	9600	4750	78

1" Tube E Optimum Horsepower Performance																			
Base Model	Motor hp	3 Fins per Inch									4 Fins per Inch								
		0" ESP			1/4" ESP			1/2" ESP			0" ESP			1/4" ESP			1/2" ESP		
		Basic	FPM	CFM	Basic	FPM	CFM	Basic	FPM	CFM	Basic	FPM	CFM	Basic	FPM	CFM	Basic	FPM	CFM
3G-606	5	19470	565	33000							22040	560	32700						
3G-608		24580	555	32400							26350	550	32100						
3G-6010		28600	545	31800							30320	540	31500						
3G-606	7.5	20790	625	36300	19890	590	34500	19350	560	32700	22970	620	36000	22450	585	34200	21920	550	32100
3G-608		25840	615	35700	25360	580	33900	24400	550	32100	27980	605	35400	27110	575	33600	26000	540	31500
3G-6010		30430	605	35400	29330	570	33300	28480	540	31500	32010	590	34500	30900	560	32700	30020	530	30900
3G-606	10	22230	720	42000	21700	690	40800	21460	665	38700	24660	710	41400	24080	685	39900	23490	655	38100
3G-608		28240	710	41400	27650	680	39600	27050	655	38100	30200	700	40800	29730	675	39300	28920	645	37500
3G-6010		33220	700	40800	32430	670	39000	31700	645	37500	35040	685	39900	34280	660	38400	33520	635	36900
3G-606	15				23200	760	44400	22590	735	42900				25300	750	43800	24890	725	42300
3G-608					29090	750	43800	28600	725	42300				31250	740	43200	30490	715	41700
3G-6010					34130	740	43200	33520	715	41700				35910	725	42300	35500	705	41100

Model 3C-59

Fan Performance Total Static Pressure – inches water gauge																								
Face Velocity	CFM	0.25"		0.38"		0.50"		0.75"		1.0"		1.25"		1.50"		1.75"		2.0"		2.25"		2.50"		
		RPM	bhp	RPM	bhp	RPM	bhp	RPM	bhp	RPM	bhp	RPM	bhp	RPM	bhp	RPM	bhp	RPM	bhp	RPM	bhp	RPM	bhp	
450	26800	221	3.0	253	3.6	282	4.2	337	5.7	385	7.5	510	10.2	554	11.7	598	13.5							
500	29800	231	3.3	261	4.2	289	4.8	340	6.3	389	8.1	426	9.9	560	13.5	600	15.3	640	17.4	678	19.2			
550	32700	241	4.2	270	5.1	297	6.0	345	7.5	391	9.3	435	11.1	460	12.9	607	17.4	644	19.5	679	21.3	715	23.7	
600	36700	252	5.1	280	6.0	305	6.9	352	8.7	396	10.5	437	12.6	476	14.7	616	20.1	650	22.2	684	24.0	718	26.4	G
650	38700	264	6.3	290	7.2	315	8.1	359	9.9	401	11.7	440	13.8	478	16.2	515	18.6	660	24.9	692	27.0	724	29.4	
700	41700	276	7.2	302	8.4	327	9.6	368	11.4	407	13.5	445	15.6	481	18.0	516	20.1	550	22.8	702	30.6	732	32.7	
750	44600	288	8.7	313	9.9	335	10.8	377	12.9	415	15.0	451	17.4	486	19.8	519	22.2	552	24.9	584	21.9	615	30.6	
800	47600					345	12.0	390	14.4	423	17.1	458	19.5	491	22.2	524	24.6	555	27.0	586	30.0	616	32.7	

Letter at the end of the table shows an alternate fan wheel selection for maximum efficiency — Alternate Model 3G-59

3/4" Tube D Physical Data												
CFM 600 FPM	Face Area sq ft	Rows Deep	Nominal Capacity BTUH/°F-TD			Physical Data						
			3 FPI	4 FPI	6 FPI	Total Surface sq ft		Coil Volume	Weight lb			Water Defrost
			Frosted	Frosted	Wet	3 FPI	4 FPI	cu ft	Steel	CU/AL	Alum	gpm
35700	59.5	6	19590	22020	25060	4280	5298	5.7	6600	4400	3900	47
		8	24660	27070	30240	5707	7064	7.5	7700	4900	4300	47
		10	29100	31530	34350	7134	8830	9.3	9200	5300	4700	94
		12	33100	34510	37960	8562	10593	11.1	10600	5700	5100	94

3/4" Tube D Optimum Horsepower Performance																			
Base Model	Motor hp	3 Fins per Inch									4 Fins per Inch								
		0" ESP			1/4" ESP			1/2" ESP			0" ESP			1/4" ESP			1/2" ESP		
		BTUH/ °F TD	Face Velocity	CFM	BTUH/ °F TD	Face Velocity	CFM	BTUH/ °F TD	Face Velocity	CFM	BTUH/ °F TD	Face Velocity	CFM	BTUH/ °F TD	Face Velocity	CFM	BTUH/ °F TD	Face Velocity	CFM
3C-596	5	19630	600	35700							21600	570	33900						
3C-598		24100	570	33900							25880	560	33300						
3C-5910		27970	560	33300							29750	550	32700						
3C-5912		30680	545	32400							31240	535	31800						
3C-596	7.5	20920	690	41000	91810	610	36300				23090	670	39900	22130	605	36000			
3C-598		26420	670	39900	24780	605	36000				28200	650	38700	25780	590	35100			
3C-5910		30640	650	38700	28850	590	35100				32430	630	37500	30520	575	34200			
3C-5912		33840	625	37200	32170	575	34200				35220	615	36600	32610	560	33300			
3C-596	10	22070	750	44600	20980	700	41600	20230	640	38000	24040	715	42500	23150	675	40200	22310	620	38900
3C-598		27330	715	42500	26540	675	40200	24990	620	36900	29330	700	41600	28380	655	38900	27250	610	36300
3C-5910		32000	700	41600	30820	655	38900	29450	610	36300	34000	685	40700	32730	640	38000	31530	600	35700
3C-5912		35510	680	40500	34460	640	38100	32910	595	35400	36950	670	39900	35580	625	37200	33860	585	34800
3C-596	15				23380	830	49400	22610	780	46400				25590	800	47600	24830	758	44900
3C-598					29160	800	47600	28140	755	44900				31180	770	45800	30340	740	44000
3C-5910					33580	770	45800	32940	740	44000				35460	750	44800	34930	725	43100
3C-5912					37750	755	45000	36640	715	42600				39150	740	44100	38080	705	42000

1" Tube E Physical Data										
CFM 600 FPM	Face Area sq ft	Rows Deep	Nominal Capacity BTUH/°F-TD		Physical Data					
			3 FPI	4 FPI	Total Surface sq ft		Coil Volume	Weight lb		Water Defrost
			Frosted	Frosted	3 FPI	4 FPI	cu ft	Steel	Alum	gpm
33900	56.7	6	19640	22060	4211	5244	8.6	6700	3900	47
		8	24980	27100	5615	6991	11.1	8000	4350	47
		10	29410	31580	7019	8739	13.6	9500	7450	94

1" Tube E Optimum Horsepower Performance																			
Base Model	Motor hp	3 Fins per Inch									4 Fins per Inch								
		0" ESP			1/4" ESP			1/2" ESP			0" ESP			1/4" ESP			1/2" ESP		
		Basic	FPM	CFM	Basic	FPM	CFM	Basic	FPM	CFM	Basic	FPM	CFM	Basic	FPM	CFM	Basic	FPM	CFM
3C-596	5	19990	610	34500							22060	600	33900						
3C-598		24840	590	33600							26370	575	32700						
3C-5910		28530	570	32400							2994	555	31500						
3C-596	7.5	21620	720	40800	20750	660	37500	19820	60	34200	23930	705	39900	22790	650	36900	22000	595	33600
3C-598		27350	700	39600	25720	640	36300	24780	585	33300	29000	680	38400	27670	630	35700	26200	570	32400
3C-5910		31720	675	38400	30240	625	35400	28530	570	32400	33230	655	37200	31870	610	34500	29770	550	31200
3C-596	10	23090	795	45000	22090	740	42000	21100	690	39000	25170	780	44100	24210	725	41100	23190	675	38400
3C-598		28820	770	42600	27700	720	40800	26800	665	37800	30670	750	42600	29480	705	39900	28240	650	36900
3C-5910		33310	745	42300	32310	700	39600	31010	650	36900	34930	725	41100	33960	680	38400	32430	630	35700
3C-596	15				24270	875	49500	23510	825	46800				26370	855	48600	25860	815	46200
3C-598					30590	850	48000	29530	805	45600				32550	830	47100	31530	785	44400
3C-5910					35200	825	46800	34250	785	44400				36800	800	45300	35720	760	43200

Model 3H-69

Fan Performance Total Static Pressure – inches water gauge																								
Face Velocity	CFM	0.25"		0.38"		0.50"		0.75"		1.0"		1.25"		1.50"		1.75"		2.0"		2.25"		2.50"		
		RPM	bhp	RPM	bhp	RPM	bhp	RPM	bhp	RPM	bhp	RPM	bhp	RPM	bhp	RPM	bhp	RPM	bhp	RPM	bhp	RPM	bhp	
450	31200	177	3.0	205	3.6	230	4.2	279	6.3	353	7.8	523	12.6	563	14.4	602	15.6	641	18.0	678	19.8			
500	34700	184	3.6	210	4.2	234	5.1	280	6.9	356	9.0	395	10.8	575	16.8	611	18.6	646	20.8	684	22.8	716	25.2	
550	38200	192	4.2	216	5.1	239	6.0	282	8.1	360	10.2	397	12.3	433	14.4	623	21.9	656	23.7	689	26.1	722	28.2	G
600	41600	201	5.7	224	6.3	245	6.9	286	9.0	324	11.4	401	13.8	435	15.9	468	18.3	669	27.6	701	30.0	730	32.1	
650	45100	210	6.3	231	7.2	251	8.1	290	10.2	327	12.6	362	15.0	439	18.0	470	20.4	500	23.2	530	25.2	743	36.6	
700	48600	219	7.2	240	8.4	259	9.3	296	11.7	331	14.1	364	16.8	396	19.8	473	22.5	503	25.2	531	27.6	559	32.1	
750	52000	228	8.7	248	9.9	268	11.7	302	13.5	335	15.9	367	18.6	398	21.3	478	25.2	506	27.6	534	30.3	560	33.0	E
800	55500					275	12.1	309	15.3	340	17.7	371	20.4	401	23.4	429	26.4	511	30.6	538	33.1	563	36.0	

Letter at the end of the table shows an alternate fan wheel selection for maximum efficiency – Alternate Models 3E-69 and 3G-69

3/4" Tube D Physical Data											
CFM 600 FPM	Face Area sq ft	Rows Deep	Nominal Capacity BTUH/°F-TD			Physical Data					
			3 FPI	4 FPI	6 FPI	Total Surface sq ft		Coil Volume	Weight lb		Water Defrost
			Frosted	Frosted	Wet	3 FPI	4 FPI	cu ft	Steel	CU/AL	Alum	gpm
41600	69.4	6	22860	25650	29230	4993	6178	6.7	7600	5200	4500	39
		8	28770	31530	35310	6658	8237	8.8	9100	5700	4900	39
		10	33960	36720	40500	8322	10296	10.9	10800	6200	5400	78
		12	38600	40250	44280	9987	12355	13.0	12400	6700	5800	78

3/4" Tube D Optimum Horsepower Performance																			
Base Model	Motor hp	3 Fins per Inch									4 Fins per Inch								
		0" ESP			1/4" ESP			1/2" ESP			0" ESP			1/4" ESP			1/2" ESP		
		BTUH/ °F TD	Face Velocity	CFM	BTUH/ °F TD	Face Velocity	CFM	BTUH/ °F TD	Face Velocity	CFM	BTUH/ °F TD	Face Velocity	CFM	BTUH/ °F TD	Face Velocity	CFM	BTUH/ °F TD	Face Velocity	CFM
3H-696	5	22320	590	41000							25190	570	39500						
3H-698		28110	570	39500							30050	555	38500						
3H-6910		32480	555	38500							34350	540	37500						
3H-6912		35060	535	37200							35740	525	36300						
3H-696	7.5	24400	690	47900	23110	610	42300				26860	665	46100	25680	600	41600			
3H-698		30670	665	46100	28800	600	41600				32900	645	44800	30880	580	40300			
3H-6910		35600	645	44800	33310	580	40300				37820	630	43700	35050	560	38900			
3H-6912		39180	620	42900	36360	555	38400				40250	600	41700	37130	545	37800			
3H-696	10	26160	765	53100	24470	695	48200	23320	625	43400	28380	735	51000	27000	675	46800	25860	600	41600
3H-698		32340	735	51000	30950	675	46800	28800	600	41600	34420	710	49300	33100	655	45500	30880	580	40300
3H-6910		37550	710	49300	35950	655	45500	33310	580	40300	39840	690	47900	38380	645	44800	35050	560	38900
3H-6912		41420	680	47100	39760	630	43800	36870	565	39300	42750	660	45900	41080	615	42600	37480	550	38100
3H-696	15				27070	820	56900	26030	760	52700				29770	795	55200	28450	740	51400
3H-698					33870	795	55200	32480	740	51400				36370	770	53400	34700	720	50000
3H-6910					39140	770	53400	37820	720	50000				41360	750	52000	40250	705	48900
3H-6912					43380	740	51300	41780	690	48000				31070	720	50100	43240	675	46800

1" Tube E Physical Data										
CFM 600 FPM	Face Area sq ft	Rows Deep	Nominal Capacity BTUH/°F-TD		Physical Data					
			3 FPI	4 FPI	Total Surface sq ft		Coil Volume	Weight lb		Water Defrost
			Frosted	Frosted	3 FPI	4 FPI	cu ft	Steel	Alum	gpm
42000	70.0	6	24250	27230	5199	6473	11.0	8000	4600	39
		8	30810	33460	6932	8631	14.1	9700	5000	39
		10	36310	38990	8665	10789	17.2	11600	5550	78

1" Tube E Optimum Horsepower Performance																			
Base Model	Motor hp	3 Fins per Inch									4 Fins per Inch								
		0" ESP			1/4" ESP			1/2" ESP			0" ESP			1/4" ESP			1/2" ESP		
		Basic	FPM	CFM	Basic	FPM	CFM	Basic	FPM	CFM	Basic	FPM	CFM	Basic	FPM	CFM	Basic	FPM	CFM
3H-696	5	23600	575	40200							26600	565	39600						
3H-698		29520	555	39000							31220	540	37800						
3H-6910		34200	540	37800							35630	520	36300						
3H-696	7.5	25910	675	47400	24900	620	43500	23160	555	39000	28420	665	46500	27440	610	42600	26250	545	38100
3H-698		32470	655	45900	30810	600	42000	28720	535	37500	34580	640	44700	32900	585	40800	30730	525	36600
3H-6910		37840	640	44700	35880	585	40800	33400	520	36300	39690	620	43200	37100	560	39300	34580	500	34800
3H-696	10	27490	750	52500	26050	695	48600	25260	640	44700	30100	735	51300	28700	680	47700	27720	625	43800
3H-698		34340	725	50700	33050	675	47100	31030	615	43200	36470	710	49500	35070	655	45900	33460	600	42000
3H-6910		40030	705	49200	38500	655	45900	36170	595	41700	42070	685	48000	40250	635	44400	37870	580	40500
3H-696	15				28880	820	57300	28070	770	54000				31780	805	56400	30520	760	53100
3H-698					36170	795	55800	34930	750	52500				38640	775	54300	37100	730	51000
3H-6910					42000	775	54300	40690	730	51000				43820	750	52500	42630	705	49500

Model 3C-72

Fan Performance Total Static Pressure – inches water gauge																								
Face Velocity	CFM	0.25"		0.38"		0.50"		0.75"		1.0"		1.25"		1.50"		1.75"		2.0"		2.25"		2.50"		
		RPM	bhp	RPM	bhp	RPM	bhp	RPM	bhp	RPM	bhp	RPM	bhp	RPM	bhp	RPM	bhp	RPM	bhp	RPM	bhp	RPM	bhp	
450	32400	239	4.2	268	4.8	295	5.7	345	7.2	391	9.0	435	11.1	567	15.0	605	17.1	642	18.9	697	20.4	715	23.1	
500	38000	252	5.4	280	6.0	305	6.9	352	8.7	396	10.5	437	12.8	476	14.7	616	20.1	650	22.2	684	24.0	718	26.4	
550	39600	266	6.6	293	7.5	316	8.1	361	10.2	402	12.0	441	14.1	478	16.5	515	18.9	662	25.5	694	27.9	726	30.0	G
600	43200	281	7.8	306	9.0	331	10.2	371	12.0	410	14.1	447	16.2	483	18.6	517	21.0	551	23.7	583	26.4	736	34.2	
650	48800	295	9.6	319	10.8	339	11.7	382	14.1	420	16.2	456	18.9	489	21.0	522	23.7	554	26.4	585	29.1	615	31.8	
700	50400	311	11.4	333	12.9	355	13.8	395	16.2	430	18.9	464	21.3	497	23.4	527	26.4	558	29.1	588	31.8	617	35.1	
750	54000	327	13.8	348	15.0	370	15.3	406	18.9	441	21.6	474	24.0	506	27.0	536	29.7	565	32.4	594	35.4	621	38.1	
800	57600					382	18.4	419	21.0	453	23.6	485	27.3	515	30.3	544	33.0	572	36.0	600	39.0	626	42.0	

Letter at the end of the table shows an alternate fan wheel selection for maximum efficiency — Alternate Model 3G-72

3/4" Tube D Physical Data												
CFM 600 FPM	Face Area sq ft	Rows Deep	Nominal Capacity BTUH/°F-TD			Physical Data						
			3 FPI	4 FPI	6 FPI	Total Surface sq ft		Coil Volume	Weight lb			Water Defrost
			Frosted	Frosted	Wet	3 FPI	4 FPI	cu ft	Steel	CU/AL	Alum	gpm
43200	72.2	6	23760	26640	30360	5181	6408	6.8	7600	5200	4400	47
		8	29880	32760	36690	6906	8547	8.9	9100	5600	4800	47
		10	35280	38180	42000	8634	10686	11.0	10900	6100	5300	94
		12	40050	41760	45930	10361	12818	13.1	12500	6600	5700	94

3/4" Tube D Optimum Horsepower Performance																			
Base Model	Motor hp	3 Fins per Inch									4 Fins per Inch								
		0" ESP			1/4" ESP			1/2" ESP			0" ESP			1/4" ESP			1/2" ESP		
		BTUH/ °F TD	Face Velocity	CFM	BTUH/ °F TD	Face Velocity	CFM	BTUH/ °F TD	Face Velocity	CFM	BTUH/ °F TD	Face Velocity	CFM	BTUH/ °F TD	Face Velocity	CFM	BTUH/ °F TD	Face Velocity	CFM
3C-726	7.5	23460	595	42800							26210	575	41400						
3C-728		29380	575	41400							31540	565	40700						
3C-7210		34060	565	40700							36220	555	40000						
3C-7212		37130	545	39300							38380	535	38400						
3C-726	10	24700	650	46800	23460	595	42800	22270	540	38900	27250	635	45700	26280	580	41800	25420	535	38500
3C-728		30820	635	45700	29520	580	41800	27940	535	38500	33120	620	44800	31680	570	41000	30240	530	38200
3C-7210		38000	620	44800	34200	570	41000	32850	530	38200	38380	605	43600	36360	560	40300	35140	525	37800
3C-7212		40200	605	43500	37950	560	40200	35550	520	37500	41260	590	42600	40500	550	39600	37880	515	37200
3C-726	15	27220	770	55400	25730	710	51100	24840	680	45700	29810	755	54400	28300	685	49300	27580	650	46800
3C-728		34060	755	54400	32630	685	49300	31320	650	46800	36360	730	52600	34560	660	47500	33840	640	46100
3C-7210		39450	730	52600	37440	660	47500	36720	640	48100	41830	710	51100	39820	645	46400	39240	630	45400
3C-7212		43730	700	50400	42150	650	46800	40950	625	45000	46880	680	48900	45230	635	45600	44400	615	44400
3C-726	20				27940	810	58300	26710	750	54000				30310	775	55800	29380	730	52600
3C-728					34640	775	55800	33410	730	52600				36940	745	53800	35860	715	51500
3C-7210					39690	746	53600	39100	715	51500				42260	725	52200	41620	700	50400
3C-7212					44930	735	52800	43950	705	50700				48300	715	51600	47630	695	50100

1" Tube E Physical Data										
CFM 600 FPM	Face Area sq ft	Rows Deep	Nominal Capacity BTUH/°F-TD		Physical Data					
			3 FPI	4 FPI	Total Surface sq ft		Coil Volume	Weight lb		Water Defrost
			Frosted	Frosted	3 FPI	4 FPI	cu ft	Steel	Alum	gpm
42300	70.8	6	24520	27540	5259	6547	10.8	8000	4450	47
		8	31170	33840	7011	8730	13.9	9600	4900	47
		10	36730	39440	8764	10912	17.0	11500	5400	94

1" Tube E Optimum Horsepower Performance																			
Base Model	Motor hp	3 Fins per Inch									4 Fins per Inch								
		0" ESP			1/4" ESP			1/2" ESP			0" ESP			1/4" ESP			1/2" ESP		
		Basic	FPM	CFM	Basic	FPM	CFM	Basic	FPM	CFM	Basic	FPM	CFM	Basic	FPM	CFM	Basic	FPM	CFM
3C-726	5	24520	600	42300							27330	590	41700						
3C-728		30800	580	41100							32710	570	40200						
3C-7210		35620	570	40200							37380	555	39300						
3C-726	7.5	25910	655	46500	24960	610	43800	2720	570	40200	28.80	645	45800	27540	600	42300	26760	560	39600
3C-728		32120	640	45300	31170	600	42300	28950	555	39300	34410	625	44400	33280	585	41400	31580	540	38400
3C-7210		37760	625	44400	36290	585	41400	34740	545	38400	39790	610	43200	37950	570	40200	36460	530	37500
3C-726	10	28170	780	53700	26920	715	50700	26280	680	48000	30660	745	52800	29950	710	50100	28820	670	47400
3C-728		35110	740	52500	34150	700	49500	33210	665	47100	37380	725	51300	36530	690	48900	35470	665	46200
3C-7210		41010	725	51300	39970	685	48600	38720	650	45900	43190	710	50100	42200	675	47700	40710	635	45000
3C-726	15				28840	795	56400	28170	760	53700				31580	785	55500	30860	745	52800
3C-728					36140	775	54900	35110	740	52500				38800	765	54000	37520	730	51600
3C-7210					42040	760	54000	41010	725	51300				44180	745	52800	43190	710	50400

Model 3H-81

Fan Performance Total Static Pressure – inches water gauge																								
Face Velocity	CFM	0.25"		0.38"		0.50"		0.75"		1.0"		1.25"		1.50"		1.75"		2.0"		2.25"		2.50"		
		RPM	bhp	RPM	bhp	RPM	bhp	RPM	bhp	RPM	bhp	RPM	bhp	RPM	bhp	RPM	bhp	RPM	bhp	RPM	bhp	RPM	bhp	
450	35700	188	3.9	213	4.8	236	5.4	281	7.2	357	9.6	396	11.4	431	14.1									
500	39700	197	4.8	220	5.7	242	6.6	284	8.7	323	10.8	399	13.2	434	15.0	467	18.6							
550	43600	207	6.0	229	6.9	249	7.8	289	9.9	326	12.3	361	14.7	437	17.7	469	19.5	500	21.9					
600	47600	217	7.2	238	8.1	257	9.3	294	11.4	330	13.8	363	16.5	396	19.2	473	22.2	502	24.3	531	27.0			
650	51500	228	8.7	248	9.6	266	10.4	301	13.2	335	15.9	367	18.6	398	21.3	478	25.2	506	27.3	534	30.0	560	32.7	E
700	55500	239	10.5	258	11.7	275	12.2	309	15.3	341	18.0	371	20.7	401	23.7	429	26.7	457	30.0	538	33.6	564	36.0	
750	59500	251	12.6	269	13.8	286	14.4	318	17.7	348	20.4	377	23.4	406	26.4	433	29.4	459	33.0	544	37.8	568	39.5	
800	63400					296	16.8	327	19.4	356	23.1	384	26.1	411	29.1	437	32.4	462	36.0	551	42.0	575	45.0	

Letter at the end of the table shows an alternate fan wheel selection for maximum efficiency — Alternate Model 3E-81

3/4" Tube D Physical Data												
CFM 600 FPM	Face Area sq ft	Rows Deep	Nominal Capacity BTUH/°F-TD			Physical Data						
			3 FPI	4 FPI	6 FPI	Total Surface sq ft		Coil Volume	Weight lb			Water Defrost
			Frosted	Frosted	Wet	3 FPI	4 FPI	cu ft	Steel	CU/AL	Alum	gpm
47600	79.3	6	26130	29310	33250	5698	7052	7.5	8600	5700	4900	39
		8	32850	36030	40350	7597	9402	9.9	10200	5400	39	39
		10	38790	41970	46330	9496	11753	12.3	12200	6100	78	78
		12	44110	46000	50600	11397	14114	14.7	14000	6700	78	78

3/4" Tube D Optimum Horsepower Performance																			
Base Model	Motor hp	3 Fins per Inch									4 Fins per Inch								
		0" ESP			1/4" ESP			1/2" ESP			0" ESP			1/4" ESP			1/2" ESP		
		BTUH/ °F TD	Face Velocity	CFM	BTUH/ °F TD	Face Velocity	CFM	BTUH/ °F TD	Face Velocity	CFM	BTUH/ °F TD	Face Velocity	CFM	BTUH/ °F TD	Face Velocity	CFM	BTUH/ °F TD	Face Velocity	CFM
3H-816	7.5	26410	610	48400							29340	600	47600						
3H-818		32910	600	47600							35690	590	46800						
3H-8110		38470	590	46800							41160	585	46400						
3H-8112		41800	560	44400							42820	550	43500						
3H-816	10	27680	675	53500	27120	645	51100	25100	570	45200	30530	660	52300	29740	620	49200	28550	560	44400
3H-818		34890	660	52300	33270	620	49200	31720	560	44400	37590	650	51500	36080	600	47600	33940	545	43200
3H-8110		40840	650	51500	38860	600	47600	36680	545	43200	43610	640	50800	41160	585	46400	38860	530	42000
3H-8112		44770	620	49200	42870	575	45600	39400	525	41700	46310	605	48000	43460	560	44400	39650	510	40500
3H-816	15	30290	785	62200	29320	745	59100	27680	675	53500	33070	765	60700	32120	720	57100	30530	660	52300
3H-818		37830	765	60700	36480	720	57100	34890	660	52300	40840	750	59500	39020	695	55100	37430	645	51100
3H-8110		44090	750	59500	42500	695	55100	40680	645	51100	46790	735	57900	45200	680	53900	43460	635	50400
3H-8112		48980	720	57000	47250	675	53400	45430	630	50100	50590	700	55500	48850	660	52200	47180	620	49200
3H-816	20				31240	835	66200	29900	765	60700				34100	800	63400	32670	745	59100
3H-818					38860	800	63400	37190	745	59100				41720	775	61500	39890	725	57500
3H-8110					44880	775	61500	43300	725	57500				47420	755	59900	46070	710	56300
3H-8112					49980	750	59400	48820	715	56700				51940	735	58200	50590	700	55500

1" Tube E Physical Data									
CFM 600 FPM	Face Area sq ft	Rows Deep	Nominal Capacity BTUH/°F-TD		Physical Data				
			3 FPI	4 FPI	Total Surface sq ft		Coil Volume	Weight lb		Water Defrost
			Frosted	Frosted	3 FPI	4 FPI	cu ft	Steel	Alum	gpm
48900	81.7	6	28300	31780	6068	7555	12.9	9200	5000	39
		8	35960	39050	8091	10074	16.5	11000	5550	39
		10	42380	45510	10114	12592	20.1	13200	6300	78

1" Tube E Optimum Horsepower Performance																			
Base Model	Motor hp	3 Fins per Inch									4 Fins per Inch								
		0" ESP			1/4" ESP			1/2" ESP			0" ESP			1/4" ESP			1/2" ESP		
		Basic	FPM	CFM	Basic	FPM	CFM	Basic	FPM	CFM	Basic	FPM	CFM	Basic	FPM	CFM	Basic	FPM	CFM
3H-816	7.5	28130	595	48600							31450	585	47700						
3H-818		35540	580	47400							37580	565	46200						
3H-8110		40940	565	46200							42890	550	45000						
3H-816	10	29820	655	53400	28810	610	49800	27120	560	45600	32760	645	52500	31780	600	48900	30720	550	45000
3H-818		36980	635	51900	35800	590	48300	34030	545	44400	39710	625	51000	38150	580	32400	36030	530	43200
3H-8110		43320	620	50700	41360	575	47100	39490	530	43200	45750	605	49500	43300	560	45900	41340	515	42000
3H-816	15	32340	755	61800	30980	710	58200	30150	670	54900	35210	740	60600	34310	700	57300	33000	660	54000
3H-818		40340	735	60000	38910	695	56700	37900	655	53400	42890	720	58800	41990	685	55800	40520	645	52500
3H-8110		47150	720	58800	45960	680	55500	44170	640	52200	49760	705	57600	48280	665	54300	46570	625	51000
3H-816	20				33190	790	64500	32080	750	61200				36270	780	63600	35210	740	60600
3H-818					41530	770	63000	40340	735	60000				44360	755	61800	42890	720	58800
3H-8110					48340	755	61800	47150	720	58800				50820	740	60300	49590	700	57300

Model 3D-85

Fan Performance Total Static Pressure – inches water gauge																								
Face Velocity	CFM	0.25"		0.38"		0.50"		0.75"		1.0"		1.25"		1.50"		1.75"		2.0"		2.25"		2.50"		
		RPM	bhp	RPM	bhp	RPM	bhp	RPM	bhp	RPM	bhp	RPM	bhp	RPM	bhp	RPM	bhp	RPM	bhp	RPM	bhp	RPM	bhp	
450	37800	185	3.9	210	4.8	233	5.7	277	7.5	360	10.8	397	12.3	433	14.1									
500	42000	194	4.8	218	5.7	239	6.6	281	8.7	320	10.8	402	14.4	435	16.5	468	18.6	500	21.0					
550	46200	204	6.0	227	7.2	247	8.4	285	10.2	322	12.6	357	15.0	440	18.9	471	21.0	501	23.4	530	26.1			
600	50400	215	7.5	236	8.4	255	9.6	292	11.7	326	14.4	359	16.8	391	19.5	476	24.0	505	26.7	532	29.1	560	31.8	E
650	54600	225	9.0	245	10.2	265	11.4	299	13.8	331	16.2	363	18.9	393	21.6	423	24.9	510	30.0	537	32.7	563	36.0	
700	58800	236	10.8	256	12.0	274	13.2	306	15.9	338	18.6	368	21.3	397	24.3	425	27.3	452	30.6	479	33.6	567	39.6	
750	63000	248	12.9	266	14.1	280	15.0	315	18.0	345	21.0	373	24.0	401	27.0	428	30.3	454	33.3	480	36.9	505	40.2	
800	67200					293	17.3	324	20.1	353	24.0	380	27.0	407	30.3	432	33.3	457	36.9	482	40.2	506	43.8	

Letter at the end of the table shows an alternate fan wheel selection for maximum efficiency — Alternate Model 3E-85

3/4" Tube D Physical Data												
CFM 600 FPM	Face Area sq ft	Rows Deep	Nominal Capacity BTUH/°F-TD			Physical Data						
			3 FPI	4 FPI	6 FPI	Total Surface sq ft		Coil Volume	Weight lb			Water Defrost
			Frosted	Frosted	Wet	3 FPI	4 FPI	cu ft	Steel	CU/AL	Alum	gpm
50400	84.3	6	27720	31080	35430	6042	7476	7.9	9000	6000	5000	47
		8	34860	38220	42780	8055	9972	10.6	10900	6600	5600	47
		10	41160	44520	48600	10071	12465	13.2	12700	7200	6300	94
		12	46730	48720	53590	12088	14954	15.9	14500	7700	6900	94

3/4" Tube D Optimum Horsepower Performance																			
Base Model	Motor hp	3 Fins per Inch									4 Fins per Inch								
		0" ESP			1/4" ESP			1/2" ESP			0" ESP			1/4" ESP			1/2" ESP		
		BTUH/ °F TD	Face Velocity	CFM	BTUH/ °F TD	Face Velocity	CFM	BTUH/ °F TD	Face Velocity	CFM	BTUH/ °F TD	Face Velocity	CFM	BTUH/ °F TD	Face Velocity	CFM	BTUH/ °F TD	Face Velocity	CFM
3D-856	7.5	27890	605	50800							30910	590	49600						
3D-858		34690	590	49600							37210	575	48300						
3D-8510		40150	575	48300							42420	560	47000						
3D-8512		44010	555	46500							44520	540	45300						
3D-856	10	29320	675	56700	27720	600	50400	26330	560	47000	32340	660	55400	30910	590	49600	30080	550	46200
3D-858		36960	660	55400	34690	590	49600	33180	550	46200	39820	650	54600	37210	575	48300	35530	535	44900
3D-8510		43260	650	53800	40150	575	48300	38470	535	44900	46200	640	53800	42250	555	46600	40990	525	44100
3D-8512		47080	610	51300	44630	565	47400	41210	515	43200	48130	590	49500	44940	545	45800	41580	505	42300
3D-856	15	31750	770	64700	30200	720	60500	29150	665	55900	34780	755	63400	33600	700	58800	32090	645	54200
3D-858		39730	755	63400	38240	700	58800	36370	645	54200	43100	745	62600	40990	680	57100	39060	630	52900
3D-8510		46540	745	62600	44520	680	57100	42420	630	52900	49560	735	61700	47290	665	55900	45360	620	52100
3D-8512		51280	705	59100	49530	660	55500	47430	620	52200	52750	685	57600	51320	650	54600	49390	610	51300
3D-856	20				33010	830	69700	31680	765	64300				36040	795	66800	34610	745	62600
3D-858					40990	795	66800	39460	745	62600				43850	765	64300	42000	720	60500
3D-8510					47250	765	64300	45780	720	60500				49900	745	63600	48800	710	59600
3D-8512					52500	740	62100	51450	710	59700				54430	725	60900	53000	690	57900

1" Tube E Physical Data									
CFM 600 FPM	Face Area sq ft	Rows Deep	Nominal Capacity BTUH/°F-TD		Physical Data				
			3 FPI	4 FPI	Total Surface sq ft		Coil Volume	Weight lb		Water Defrost
			Frosted	Frosted	3 FPI	4 FPI	cu ft	Steel	Alum	gpm
51000	85.0	6	29440	33070	6313	7861	12.9	9600	5100	47
		8	37420	40630	8418	10481	16.7	11600	5750	47
		10	44090	47350	10522	13101	20.4	13600	6450	94

1" Tube E Optimum Horsepower Performance																			
Base Model	Motor hp	3 Fins per Inch									4 Fins per Inch								
		0" ESP			1/4" ESP			1/2" ESP			0" ESP			1/4" ESP			1/2" ESP		
		Basic	FPM	CFM	Basic	FPM	CFM	Basic	FPM	CFM	Basic	FPM	CFM	Basic	FPM	CFM	Basic	FPM	CFM
3D-856	7.5	29270	595	50700							32730	585	49800						
3D-858		36980	580	49200							39100	565	48000						
3D-8510		42590	565	48000							44630	550	46800						
3D-856	10	31020	655	55800	29710	605	51600	28130	555	47100	34090	645	54900	32980	595	50700	31960	550	46500
3D-858		38560	640	54300	37240	590	50100	35140	540	45900	41310	625	53100	39700	580	49200	37490	530	45000
3D-8510		45070	620	52800	43030	575	48900	41080	530	45000	47770	610	51600	45050	560	47700	43010	515	43800
3D-856	15	33820	760	64500	32320	715	60900	31370	670	57000	36890	750	63600	35870	705	60000	34340	660	56100
3D-858		42150	740	63000	40480	695	59100	39430	655	55500	40040	725	61500	43520	680	57900	42000	640	54300
3D-8510		49050	720	61200	47810	680	57900	45950	640	54300	51600	700	60000	50240	665	56400	48200	620	53100
3D-856	20				34530	790	67200	33380	750	63900				37740	780	66300	36640	740	63000
3D-858					43210	770	65400	41790	730	62100				46160	755	64200	44630	720	61200
3D-8510					50290	755	64200	48880	715	60900				52700	735	62700	51600	700	59400

Models 3A-96 3A-99

Fan Performance Total Static Pressure – inches water gauge																								
Face Velocity	CFM	0.25"		0.38"		0.50"		0.75"		1.0"		1.25"		1.50"		1.75"		2.0"		2.25"		2.50"		
		RPM	bhp	RPM	bhp	RPM	bhp	RPM	bhp	RPM	bhp	RPM	bhp	RPM	bhp	RPM	bhp	RPM	bhp	RPM	bhp	RPM	bhp	
450	43200	159	4.5	181	5.7	201	6.6	240	8.7	353	11.7	391	13.8	483	18.6	517	21.0	551	23.7	583	26.4			
500	48000	166	5.7	187	6.9	206	7.8	243	10.2	277	12.9	394	16.2	429	18.9	462	22.4	555	27.0	586	29.7	616	31.2	C
550	52800	174	6.9	194	8.1	212	9.6	246	12.0	279	14.7	310	17.7	432	21.3	464	24.0	494	27.0	591	33.9	620	37.2	
600	57600	182	8.7	202	9.9	219	11.1	251	14.1	282	16.5	311	19.8	339	23.1	467	27.3	496	30.4	525	33.3	626	42.0	
650	62400	191	10.2	209	11.7	232	13.8	257	16.2	286	19.2	314	22.2	340	25.5	366	29.1	500	34.2	527	37.5	554	40.5	
700	67200	200	12.6	217	13.8	233	14.8	265	19.5	291	21.2	317	25.2	343	28.5	368	32.1	392	36.0	532	41.7	557	45.0	B
750	72000	209	14.7	226	16.5	241	17.3	270	21.3	297	24.9	322	28.5	346	31.8	370	35.4	393	39.3	416	43.2	562	50.4	
800	76800					249	20.1	277	23.4	303	27.9	327	31.8	351	35.4	373	39.3	395	42.9	417	47.4	438	51.6	

Letter at the end of the table shows an alternate fan wheel selection for maximum efficiency — Alternate Models 3B-96, 3B-99, 3C-96 and 3C-99

3A-96 – 3/4" Tube D Physical Data												
CFM 600 FPM	Face Area sq ft	Rows Deep	Nominal Capacity BTUH/°F-TD			Physical Data						
			3 FPI	4 FPI	6 FPI	Total Surface sq ft		Coil Volume	Weight lb			Water Defrost
			Frosted	Frosted	Wet	3 FPI	4 FPI	cu ft	Steel	CU/AL	Alum	gpm
57600	96.3	6	31680	35520	40470	6906	8544	9.4	11000	6500	5700	47
		8	39840	43680	48930	9207	11394	12.6	12200	7200	6300	47
		10	47040	50880	56250	11511	14247	15.9	14300	8000	7000	94
		12	53400	55680	61250	13815	17091	19.1	16000	8700	7600	94

3A-96 – 3/4" Tube D Optimum Horsepower Performance																			
Base Model	Motor hp	3 Fins per Inch									4 Fins per Inch								
		0" ESP			1/4" ESP			1/2" ESP			0" ESP			1/4" ESP			1/2" ESP		
		BTUH/ °F TD	Face Velocity	CFM	BTUH/ °F TD	Face Velocity	CFM	BTUH/ °F TD	Face Velocity	CFM	BTUH/ °F TD	Face Velocity	CFM	BTUH/ °F TD	Face Velocity	CFM	BTUH/ °F TD	Face Velocity	CFM
3A-966	10	32640	640	61400	30100	560	53800				35900	615	59000	34370	550	52800			
3A-968		40220	615	59000	37920	550	52800				43680	600	57600	40610	535	51400			
3A-9610		47040	600	57600	43970	535	51400				49440	580	55700	46850	525	50400			
3A-9612		51900	575	55200	47700	525	50400				52990	565	54300	48480	515	49500			
3A-966	15	35330	740	71000	33600	680	65300	32160	620	59500	38880	720	69100	37150	665	63800	35710	605	58100
3A-968		44160	720	69100	42430	665	63800	40030	605	58100	47520	705	67700	45310	645	61900	43490	595	57100
3A-9610		51740	705	67700	49250	645	61900	46850	595	57100	55300	695	66700	52320	630	60500	49830	585	56200
3A-9612		57000	670	64200	54200	620	59400	51900	575	55200	58660	650	62400	56450	610	58500	52990	565	54300
3A-966	20				36000	760	73000	33890	690	66200				39260	735	70600	37440	680	65300
3A-968					44740	735	70600	43000	680	65300				47620	710	68200	46460	670	64300
3A-9610					51940	710	68200	50400	670	64300				55300	695	66700	53760	660	63400
3A-9612					58100	695	66600	56400	655	63000				60000	680	65400	58370	645	61800
3A-966	25							36380	775	74400							39840	760	73000
3A-968								45600	760	73000							48960	740	71000
3A-9610								53000	740	71000							56450	730	70000
3A-9612								59300	720	69000							61440	705	67800

3A-99 – 1" Tube E Physical Data										
CFM 600 FPM	Face Area sq ft	Rows Deep	Nominal Capacity BTUH/°F-TD		Physical Data					
			3 FPI	4 FPI	Total Surface sq ft		Coil Volume	Weight lb		Water Defrost
			Frosted	Frosted	3 FPI	4 FPI	cu ft	Steel	Alum	gpm
59400	99.2	6	34360	38590	7368	9174	15.1	11700	5850	47
		8	43670	47420	9824	12232	19.4	13200	6500	47
		10	51460	55250	12280	15290	23.8	15500	7200	94

3A-99 – 1" Tube E Optimum Horsepower Performance																			
Base Model	Motor hp	3 Fins per Inch									4 Fins per Inch								
		0" ESP			1/4" ESP			1/2" ESP			0" ESP			1/4" ESP			1/2" ESP		
		Basic	FPM	CFM	Basic	FPM	CFM	Basic	FPM	CFM	Basic	FPM	CFM	Basic	FPM	CFM	Basic	FPM	CFM
3A-996	10	35180	615	60900	32930	560	55500				38790	605	60000	37300	550	54600			
3A-998		43570	595	59100	41320	545	54000				46620	585	57900	44040	535	52800			
3A-9910		50530	580	57600	47950	530	52500				52870	565	56100	50200	515	51000			
3A-996	15	37610	710	70200	36310	660	65400	35180	615	60990	41470	695	69000	39880	650	64500	38790	605	60000
3A-998		47150	690	68400	45300	645	63900	43670	600	59400	50590	675	66900	48710	635	62700	46620	585	57900
3A-9910		55180	670	66600	53110	630	62400	50840	585	58200	58130	655	65100	56250	620	61500	53170	570	56700
3A-996	20				38230	730	72600	36920	690	68400				42160	720	71400	40670	680	67200
3A-998					48260	715	70800	46630	670	66600				51390	700	69300	50000	660	65400
3A-9910					56520	700	69300	54560	655	65100				59420	680	67800	57340	640	63600
3A-996	25							39680	765	75900							43150	755	75000
3A-998								49390	745	73800							52870	735	72600
3A-9910								57660	730	72300							60710	715	71100

Model 4G-62

Fan Performance Total Static Pressure – inches water gauge																							
Face Velocity	CFM	0.25"		0.38"		0.50"		0.75"		1.0"		1.25"		1.50"		1.75"		2.0"		2.25"		2.50"	
		RPM	bhp	RPM	bhp	RPM	bhp	RPM	bhp	RPM	bhp	RPM	bhp	RPM	bhp	RPM	bhp	RPM	bhp	RPM	bhp	RPM	bhp
450	28000	270	3.3	304	4.1	336	4.8	396	6.4	452	8.1												
500	31100	284	4.1	317	5.1	346	5.9	402	7.5	455	9.3	505	11.3										
550	34200	300	5.1	330	6.1	358	7.1	411	8.8	461	10.7	508	12.7	554	14.7								
600	37300	316	6.3	345	7.4	372	8.3	422	10.2	468	12.2	513	14.3	556	16.3	598	18.8						
650	40400	333	7.7	360	8.9	385	9.9	433	12.0	478	13.9	520	16.0	561	18.3	601	20.7	640	23.3	678	25.9		
700	43500	350	9.2	376	10.9	400	11.7	446	13.8	488	15.9	529	18.2	568	20.4	606	22.9	643	25.5	679	282	715	30.8
750	46700	369	11.2	393	12.7	416	13.6	460	15.8	501	18.2	539	20.5	577	22.9	613	25.5	648	28.1	683	30.9	717	33.7
800	49800					432	15.6	474	18.1	513	20.6	550	23.0	586	25.5	621	28.2	655	30.9	688	33.7	721	36.8

1" Tube E Physical Data										
CFM 600 FPM	Face Area sq ft	Rows Deep	Nominal Capacity BTUH/°F-TD		Physical Data					
			3 FPI Frosted	4 FPI Frosted	Total Surface sq ft		Coil Volume cu ft	Weight lb		Water Defrost gpm
					3 FPI	4 FPI		Steel	Alum	
37200	62.2	6	21480	24120	4620	5752	8.8	9400	5700	52
		8	27290	29640	6160	7670	11.5	11200	6100	52
		10	32160	34530	7700	9587	14.2	13100	6500	104

1" Tube E Optimum Horsepower Performance																			
Base Model	Motor hp	3 Fins per Inch									4 Fins per Inch								
		0" ESP			1/4" ESP			1/2" ESP			0" ESP			1/4" ESP			1/2" ESP		
		Basic	FPM	CFM	Basic	FPM	CFM	Basic	FPM	CFM	Basic	FPM	CFM	Basic	FPM	CFM	Basic	FPM	CFM
4G-626	7.5	22050	620	38400	20710	565	35200				24300	610	37800	23370	555	34400			
4G-628		27290	600	37200	26140	555	34400				29330	590	36600	27840	545	33800			
4G-6210		31780	585	36200	30290	540	33400				33420	575	35700	31930	530	32800			
4G-626	10	23070	690	42800	22560	650	40400	21670	605	37600	25420	680	42200	24740	640	39700	24060	595	36800
4G-628		29270	675	41800	28060	635	39400	27160	500	36600	31370	665	41200	30130	625	38800	28950	580	36000
4G-6210		34230	660	41000	32870	620	38400	31390	575	35600	36150	650	40000	34840	610	37800	33050	565	35000
4G-626	15	25320	800	49600	24800	765	47600	23770	725	45000	27780	790	49000	26970	755	46800	26290	715	44400
4G-628		31840	785	48800	30940	750	46400	30030	710	44000	34220	775	48000	33050	735	45600	32120	700	43400
4G-6210		37010	770	47800	36170	735	45600	35260	695	43000	38940	755	46800	38070	720	44600	37260	685	42400
4G-626	20							25700	825	51200							28270	815	50600
46-628								32290	805	50000							34720	795	49200
46-6210								37460	785	48600							39490	775	48000

Model 4C-77

Fan Performance Total Static Pressure – inches water gauge																								
Face Velocity	CFM	0.25"		0.38"		0.50"		0.75"		1.0"		1.25"		1.50"		1.75"		2.0"		2.25"		2.50"		
		RPM	bhp	RPM	bhp	RPM	bhp	RPM	bhp	RPM	bhp	RPM	bhp	RPM	bhp	RPM	bhp	RPM	bhp	RPM	bhp	RPM	bhp	
450	34600	217	3.4	250	4.3	250	4.5	337	7,2	387	9.3	509	12.8	554	15.0	597	17.7							
500	38500	227	4.2	258	5.2	258	5,3	339	8.2	389	10.6	433	12.8	558	17.2	599	19.8	639	22.2	675	24,3			
550	42300	236	5.0	266	6.2	266	6.5	343	9.5	390	12.0	435	14.4	474	17.6	604	22.2	642	24,8	679	27,3	715	30.3	
600	46200	247	6.1	275	7.6	275	7.7	349	10.9	394	13.6	436	16.1	476	19.1	612	25.3	647	28.0	682	30.7	716	33.6	G
650	50000	258	7.4	285	8.8	285	8.9	356	12.6	398	15.2	439	17.8	477	20.8	515	23.5	655	31.5	689	34.3	721	37.1	
700	53900	269	8.8	295	10.5	295	10.5	363	14.3	404	17.2	443	19.9	480	22.9	516	26.0	550	29.4	697	38.5	728	41.4	
750	57800	281	10.6	306	12.2	306	12.4	372	16.3	411	19.2	448	22.2	483	25.3	518	28.3	551	32,0	584	35.7	613	39.1	
800	61600					317	14.2	380	18.4	418	21.4	454	24.6	488	27.9	521	31.2	553	34.5	585	38.4	615	42.0	

Letter at the end of the table shows an alternate fan wheel selection for maximum efficiency — Alternate Model 4G-77

1" Tube E Physical Data										
CFM 600 FPM	Face Area sq ft	Rows Deep	Nominal Capacity BTUH/°F-TD		Physical Data					
			3 FPI Frosted	4 FPI Frosted	Total Surface sq ft		Coil Volume cu ft	Weight lb		Water Defrost gpm
					3 FPI	4 FPI		Steel	Alum	
46600	77.8	6	26940	30260	5777	7193	10,9	9700	5850	52
		8	34250	37180	7702	9590	14,3	11600	6350	52
		10	40350	43320	9628	11988	17.7	13600	6750	104

1" Tube E Optimum Horsepower Performance																			
Base Model	Motor hp	3 Fins per Inch									4 Fins per Inch								
		0" ESP			1/4" ESP			1/2" ESP			0" ESP			1/4" ESP			1/2" ESP		
		Basic	FPM	CFM	Basic	FPM	CFM	Basic	FPM	CFM	Basic	FPM	CFM	Basic	FPM	CFM	Basic	FPM	CFM
4C-776	7.5	27750	625	48600	25830	560	43600				30500	610	47400	29250	550	42800			
4C-778		34250	600	46600	32400	545	42400				36570	585	45600	34310	530	41200			
4C-7710		39630	580	45200	37600	530	41200				41470	565	44000	39060	510	39600			
4C-776	10	29340	700	54400	28230	645	50200	26470	585	45600	32130	685	53200	30890	630	49000	29720	575	44800
4C-778		36730	675	52600	34810	625	48600	33450	570	44400	39210	660	51400	33380	610	47400	35400	555	43200
4C-7710		42790	655	51000	40600	605	47000	38580	555	43200	44970	640	49800	42710	590	46000	40300	535	41600
4C-776	15	32010	815	63400	30960	760	59200	29580	715	55600	35170	800	62200	33690	745	58000	32680	700	54400
4C-778		40030	790	61400	38580	740	57600	36980	690	53600	42700	770	60000	41080	725	56400	39680	675	52600
4C-7710		46360	765	59600	44900	720	56000	43520	675	52600	48550	745	58000	47380	705	54800	45590	655	51000
4C-776	20							32010	815	63400							35170	800	62200
4C-778								40030	790	61400							42950	775	60200
4C-7710								46440	770	60000							48700	750	58400

Model 4H-93

Fan Performance Total Static Pressure – inches water gauge																								
Face Velocity	CFM	0.25"		0.38"		0.50"		0.75"		1.0"		1.25"		1.50"		1.75"		2.0"		2.25"		2.50"		
		RPM	bhp	RPM	bhp	RPM	bhp	RPM	bhp	RPM	bhp	RPM	bhp	RPM	bhp	RPM	bhp	RPM	bhp	RPM	bhp	RPM	bhp	
450	41800	177	3.8	205	4.9	231	6.0	279	8.5	354	10.4	524	16.8	564	19.1	603	21.5	641	24.0	678	26.7			
500	46500	184	4.7	210	5.8	234	7.0	280	9.5	356	12.0	395	14.5	576	22.5	612	25.1	648	27.8	683	30.5	717	33.5	
550	51100	192	5.8	217	6.7	239	8.1	283	10.7	360	13.8	398	16.4	433	19.31	625	29.2	658	32.0	691	34.8	723	37.9	G
600	55800	201	7.1	224	8.2	246	9.6	286	12.3	325	15.3	402	18.6	435	21.5	468	24.6	672	36.9	702	39.9	733	43.2	
650	60400	210	8.4	232	9.8	252	11.2	291	14.0	327	17.0	362	202	439	24.1	470	27.2	501	30.5	530	33.7	745	48.9	
700	65100	220	10.1	240	11.5	260	12.9	297	15.9	331	19.0	364	22.5	396	26.4	474	30.5	503	33.7	532	36.9	559	40.5	
750	69800	230	12.1	249	13.5	268	15.0	303	18.2	336	21.3	368	24.8	398	28.8	479	33.8	507	37.2	534	40.6	561	44.2	E
800	74400					276	17.2	310	20.5	341	23.9	372	27.5	401	31.4	430	35.4	512	41.0	538	44.7	564	46.4	

Letter at the end of the table shows an alternate fan wheel selection for maximum efficiency — Alternate Models 4E-93 and 4G-93

1" Tube E Physical Data										
CFM 600 FPM	Face Area sq ft	Rows Deep	Nominal Capacity BTUH/°F-TD		Physical Data					
			3 FPI Frosted	4 FPI Frosted	Total Surface sq ft		Coil Volume cu ft	Weight lb		Water Defrost gpm
					3 FPI	4 FPI		Steel	Alum	
56000	93.3	6	32320	36310	6932	8631	13.1	11000	6950	52
		8	41090	44610	9243	11508	17.2	13200	7400	52
		10	48420	51990	11554	14385	21.3	16000	8000	104

1" Tube E Optimum Horsepower Performance																			
Base Model	Motor hp	3 Fins per Inch									4 Fins per Inch								
		0" ESP			1/4" ESP			1/2" ESP			0" ESP			1/4" ESP			1/2" ESP		
		Basic	FPM	CFM	Basic	FPM	CFM	Basic	FPM	CFM	Basic	FPM	CFM	Basic	FPM	CFM	Basic	FPM	CFM
4H-936		32320	600	56000							35920	585	54600						
4H-938	7.5	40590	580	54200							42920	565	52800						
4H-9310		46460	560	52200							48800	545	50800						
4H-936		34530	675	63000	33090	615	57400				37690	660	61600	36480	605	56400			
4H-938	10	43280	655	61200	40980	595	55600				45810	635	59200	43570	580	54200			
4H-9310		50250	635	59200	47520	580	54000				52710	615	57400	49450	560	52200			
4H-936		37810	785	73200	35960	730	68200	34630	680	63400	41050	770	71800	39650	720	67200	37880	665	62000
4H-938	15	46940	760	71000	45190	710	66200	43280	655	61200	50290	745	69600	48240	695	64800	46090	640	59800
4H-9310		54620	740	69000	52870	690	64400	50440	640	59800	57290	720	67200	55330	670	62600	52900	620	57800
4H-936					38680	825	76960	37510	775	72400				42450	810	75600	40680	760	71000
4H-938	20				48400	BOO	74600	46750	755	70400				51870	785	73200	49730	735	68600
4H-9310					55980	775	72400	54230	730	68200				58590	755	70400	56910	710	66200

Model 4H-109

Fan Performance Total Static Pressure – inches water gauge																								
Face Velocity	CFM	0.25"		0.38"		0.50"		0.75"		1.0"		1.25"		1.50"		1.75"		2.0"		2.25"		2.50"		
		RPM	bhp	RPM	bhp	RPM	bhp	RPM	bhp	RPM	bhp	RPM	bhp	RPM	bhp	RPM	bhp	RPM	bhp	RPM	bhp	RPM	bhp	
450	49000	189	5.5	214	6.6	237	7.8	281	10.3	358	13.3	396	15.8	433	18.5									
500	54500	199	6,9	222	8.1	244	9.3	285	12.0	324	14.9	400	18,4	435	21.2	468	23.9							
550	59900	209	8,5	231	9.7	252	11.1	290	13.8	327	16.9	362	20.4	439	24.2	470	27.0	501	30.1					
600	65400	220	10.4	241	11.7	260	13.1	297	16.0	331	19.4	365	23.0	396	26.5	475	30.6	503	33.9	532	37.1			
650	70800	232	12.5	251	14.0	270	15,5	304	18.6	337	22.0	369	25.7	399	29.4	481	34.6	508	38.0	535	41.4	561	44.9	E
700	76300	244	15.0	262	16.6	280	18.3	313	21.6	344	25.1	374	28.9	403	32.8	431	36.8	458	41.4	540	46.5	566	50.5	
750	81800	256	17.9	274	19.6	290	205	322	24.8	352	28,6	380	32.6	408	36.5	435	40.8	461	45.5	547	51.9	571	56.4	
800	87200					301	24.7	331	28.4	360	32.5	387	36.5	414	40.6	439	44.9	464	49,6	555	58,1	578	62.2	

Letter at the end of the table shows an alternate fan wheel selection for maximum efficiency — Alternate Model 4E-109

1" Tube E Physical Data										
CFM 600 FPM	Face Area sq ft	Rows Deep	Nominal Capacity BTUH/°F-TD		Physical Data					
			3 FPI Frosted	4 FPI Frosted	Total Surface sq ft		Coil Volume cu ft	Weight lb		Water Defrost gpm
					3 FPI	4 FPI		Steel	Alum	
65300	109.0	6	37720	42360	8088	10070	15.3	12800	7600	52
		8	47930	52050	10783	13426	20.1	15200	8400	52
		10	56490	60650	13479	16783	24.8	18000	9050	104

1" Tube E Optimum Horsepower Performance																			
Base Model	Motor hp	3 Fins per Inch									4 Fins per Inch								
		0" ESP			1/4" ESP			1/2" ESP			0" ESP			1/4" ESP			1/2" ESP		
		Basic	FPM	CFM	Basic	FPM	CFM	Basic	FPM	CFM	Basic	FPM	CFM	Basic	FPM	CFM	Basic	FPM	CFM
4H-1096	10	37190	590	64400							41750	580	63200						
4H-1098		47200	575	62600							49810	560	61000						
4H-10910		54270	560	61000							57010	545	59400						
4H-1096	15	40450	685	74600	39330	640	69800	37530	595	64800	44580	675	73600	43270	630	68600	41970	585	63800
4H-1098		51130	665	72400	48770	625	68200	47200	575	62600	54610	655	71400	52430	610	66400	50140	565	61600
4H-10910		59610	650	70800	57230	610	66400	54610	565	61600	62680	635	69200	60280	595	64800	57230	550	60000
4H-1096	20	43370	760	82800	41560	720	76400	40340	675	73600	47200	745	81200	46000	705	76800	44250	665	72400
4H-1098		54050	740	80600	52570	700	76400	50900	660	72000	57550	725	79000	56030	685	74600	54060	645	70400
4H-10910		63130	725	79000	61540	685	74600	59270	645	70400	66380	705	76800	64640	670	73000	62350	630	68600
4H-1096	25				43940	780	85000	42690	745	81200				47960	770	84000	46650	730	80000
4H-1098					55180	765	83400	53480	725	79000				58970	750	81800	56790	710	77400
4H-10910					64040	745	81200	62450	710	77400				67250	730	79600	65950	695	75800

ELECTRIC DEFROST

Available models listed are limited to 3/4" copper tube/aluminum fin or 3/4" aluminum fin coil models. Tubular heaters inserted through fin Turbo-Spacers, which will efficiently defrost the coil from inside out.

- ED models, not having drain pan heat, are applied in rooms above freezing.
- EDL models have a tubular heater drain pan grid. Pans are insulated and have a mill galvanized bottom cover standard. Any designated electric defrost model may be EDL, however, 4 FPI is recommended for low temperature applications to -20°F.
- Temperature termination thermostats are provided, and need to be wired in the unit controls so that it will automatically terminate defrost and delay fans until the coil has been re-cooled.
- Contact factory for low temperature applications with flooded, recirculated, or brine feed to determine if electric defrost is feasible.

Multiple Circuits

When heater ampacity exceeds 48.0 Amp, multiple circuits are required.

Heater Access

- On one fan units, heater access is required as shown in the table at the refrigerant connection end.
- On two and three fan units, access is required as shown on both ends of the unit. Eight inches less access is required at the refrigerant connection end of the unit.

Base Model	ED Heater kW and Amps								EDL Heater kW and Amps								Heater Access
	230/3/360**		460/3/360		575/3/360		380/3/50		230/3/360**		460/3/360		575/3/360		380/3/50		
	kW	Amps	kW	Amps	kW	Amps	kW	Amps	kW	Amps	kW	Amps	kW	Amps	kW	Amps	
1F-096	4.8	12.0	4.8	6.0	4.8	4.8	4.4	6.6	8.1	20.3	8.1	10.2	8.1	8.1	7.4	11.2	41"
1F-098	7.2	18.1	7.2	9.0	7.2	7.2	6.6	10.0	10.5	26.4	10.5	13.2	10.5	10.5	9.6	14.5	
2F-186	9.6	24.1	9.6	12 .0	9.6	9.6	8.7	13.3	16.2	40.7	16.2	20.3	16.2	16.3	14.7	22.4	41"
2F-188	14.4	36.1	14.4	18.1	14.4	14.5	13.1	36.1	21.0	52.7*	21.0	26.4	21.0	21.1	19.1	29.0	
1G-206	10.8	27.2	10.8	13.6	10.8	10.8	9.8	14.9	16.1	40.5	16.1	20.2	16.1	16.2	14.7	22.3	64"
1G-208	14.4	36.1	14.4	18.1	14.4	14.5	13.1	19.9	19.7	49.5*	19.7	36.1	19.7	19.8	17.9	27.3	
1C-246	14.4	36.1	14.4	18.1	14.4	14.5	13.1	19.9	19.7	49.5*	19 .7	36.1	19.7	19.8	17.9	27.3	64"
1C-248	18.0	45.2	18.0	22.6	18.0	18.1	16.4	24.9	26.9	67.6*	26.9	38.8	26.9	27.0	24.5	37.2	
1D-286	18.0	18.0	18.0	22.6	18.0	18.1	16.4	24.9	23.3	58.6*	23.3	29.3	22.3	23.4	21.2	32.2	64"
1D-288	21.6	21.6*	21.6	27.1	21.6	21.7	19.7	29.9	30.5	76.6*	30.5	38.3	30.5	30.6	27.8	42.2	
1A-326	25.2	25.2*	25.2	31.6	25.2	25.3	22.9	34.8	30.5	76.6*	30.5	38.3	30.5	30.6	27.8	42.2	64"
1A-328	28.8	28.8*	28.8	36.1	28.8	28.9	26.2	39.8	37.7	94.7*	37.7	47.3	3 .7	37.9	34.3	52.2*	
2G-336	18.0	45.2	18.0	22.6	18.0	18.1	16.4	24.9	26.5	66.4*	26.5	33.2	26.5	26.6	24.1	36.6	52"
2G-338	24.0	60.2*	24.0	30.1	24.0	24.1	21.8	33.2	32.5	81.5*	32.5	40.7	32.5	32.6	29.5	44.9	
2C-396	24.0	60.2*	24.0	30.1	24.0	24.1	21.8	33.2	32.5	81.5*	32.5	40.7	32.5	32.6	29.5	44.9	52"
2C-398	30.0	75.3*	30.0	37.7	30.0	30.1	27.3	41.5	44.5	111.6*	44.5	55.8*	44.5	44.6	40.5	61.5*	
2G-406	21.6	54.2*	21.6	27.1	21.6	21.7	19.7	29.9	31.8	79.8*	31.8	39.9	31.8	31.9	28.9	43.9	64"
2G-408	28.8	72.3*	28.8	36.1	28.8	28.9	26.2	39.8	39.0	97.9*	39.0	48.9*	39.0	39.1	35.5	53.9*	
2H-466	30.0 □	75.3*	30.0	37.7	30.0	30.1	27.3	41.5	38.5	96.6*	38.5	48.3*	38.6	38.6	35.0	53.2*	52"
2H-468	36.0	90.4*	36.0	45.2	36.0	36.1	32.8	49.8*	50.5	126.7*	50.5	63.3*	50.5	50.7*	45.9	69.8*	
2C-486	28.8	72.3*	28.8	36.1	28.8	28.9	26.2	39.8	39.0	97.9*	39.0	48.9*	39.0	39.1	35.5	53.9*	64"
2C-488	36.0	90.4*	36.0	45.2	36.0	36.1	32.8	49.8*	53.4	134.0	53.4	67.0*	53.4	53.6*	48.6	73.8*	
3G-506	27.0	67.8*	27.0	33.9	27.0	27.1	24.6	37.1	39.5	99.2*	39.5	49.6*	39.5	39.7	36.0	54.6*	80"
3G-508	36.0	90.4*	36.0	45.2	36.0	36.1	32.8	49.8*	48.5	121.8 *	48.5	60.9*	48.5	48.7*	44.1	67.1*	
2H-546	42.0	105.4*	42.0	52.7*	42.0	42.2	38.2	58.1*	50.5	126.7*	50.5	63.3*	50.5	50.7*	45.9	69.8*	52"
2H-548	48.0	105.4*	48.0	60.2*	48.0	48.2*	43.7	66.4*	62.5	156.8*	62.5	78.4*	62.5	62.7*	56.8	86.4*	
2D-566	36.0	90.4*	36.0	45.2	36.0	36.1	32.8	49.8	46.2	115.9 *	462	58.0*	46.2	46.4	42.0	63.9 *	64"
2D-568	43.2	108.4*	43.2	54.2*	43.2	42.4	39.3	59.7*	60.2	152.1*	60.6	76.0*	60.6	60.8*	55.1	83.8 *	
3C-596	36.0	90.4*	36.0	45.2	36.0	36.1	32.8	49.8*	48.5	121.8*	48.5	60.9*	48.5	48.7*	44.1	67.1 *	80"
3C-598	45.0	113.0*	45.0	56.5*	45.0	45.2	40.9	62.2 *	66.5	167.0*	66 5	83.5 *	66.5	66.8 *	60.5	92.0 *	
2A-646	50.4	126.5*	50.4	63.3*	50.4	50.6*	45.9	69.7*	60.6	152.1*	60.6	76.0*	60.6	60.8*	55.1	83.8*	64"
2A-648	57.6	144.6 *	57.6	72.3*	57.6	57.8*	52.4	79.6*	75.0	188.2 *	75.0	94.1*	75.0	75.3*	68.2	103.7 *	
3H-696	45.0	113.0*	45.0	56.5*	45.0	45.2	40.9	62.2*	57.5	144.4*	57.5	72.2*	57.5	57.7*	52.3	79.5*	80"
3H-698	54 .0	135.6*	54.0	67.8*	54.0	54.2*	49.1	74.7*	75.5	189.5*	75.5	94.8*	75.5	75.8*	68.7	104.4*	

END VIEW SHOWING COIL CONNECTION ORIENTATION

L - LIQUID S - SUCTION HG - HOT GAS SUPPLY R - DEFROST RELEIF ! - LIQUID INLET D- LIQUID OUTLET

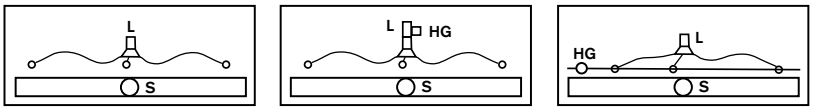

DX
AIR, WATER
ELECTDRIC
DEFROST

DXF
HOT GAS
DEFROST

DXA
HOT GAS
DEFROST

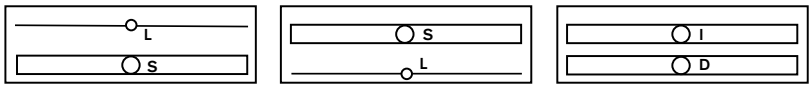

RT

RB AND FL

WATER
GLYCOL
BRINE

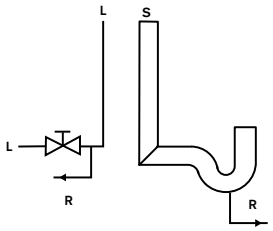

CONNECT HOT GAS
RELIEF TO BOTTOM OF
THE LOWEST HEADER LINE
(LIQUID OR SUCTION)

COPPER TUBES – ALUMINUM FIN COILS REFRIGERANT CONNECTIONS

Design Capacity tons	Direct Expansion R-22						DX R-404A and R-507				2 to 1 Recirculated R-22					
	Liquid Feed	SST °F					Liquid Feed	SST °F			Liquid Feed	SST °F				
		30	20	0	-20	-30		0	-20	-30		30	20	-20	-30	-40
5	⅝"	1⅜"	1⅜"	1⅝"	2⅛"	2⅛"	⅞"	1⅝"	2⅛"	2⅛"	⅞"	1⅝"	1⅝"	2⅝"	2⅝"	2⅝"
10	⅞"	1⅝"	1⅝"	2⅛"	2⅛"	2⅝"	⅞"	2⅛"	2⅝"	2⅝"	1⅛"	2⅛"	2⅛"	2⅝"	3⅛"	3⅛"
15	⅞"	2⅛"	2⅛"	2⅝"	2⅝"	3⅛"	1⅛"	2⅝"	2⅝"	3⅛"	1⅛"	2⅝"	2⅝"	3⅛"	4"	4"
20	1⅛"	2⅛"	2⅛"	2⅝"	3⅛"	(2⅝")	1⅛"	2⅝"	(2⅛")	(2⅝")	1⅜"	2⅝"	2⅝"	4"	4"	4"
25	1⅛"	2⅛"	2⅝"	(2⅛")	(2⅝")	(2⅝")	(1⅜")	(2⅛")	(2⅝")	(3⅛")	1⅜"	2⅝"	3⅛"	4"	4"	4"
30	1⅛"	2⅝"	2⅝"	(2⅛")	(2⅝")	(3⅛")	(1⅜")	(2⅛")	(3⅛")	(3⅛")	1⅜"	3⅛"	3⅛"	4"	4"	5"
35	1⅛"	2⅝"	2⅝"	(2⅝")							1⅝"	3⅛"	3⅛"	4"	5"	6"
40	(1⅜")	(2⅛")	(2⅛")								1⅝"	3⅛"	3⅛"	4"	5"	6"
45	(1⅜")	(2⅛")	(2⅛")								1⅝"	3⅛"	4"	5"	5"	6"
50	(1⅜")	(2⅛")	(2⅝")								2⅛"	4"	4"	5"	6"	6"
55	(1⅜")	(2⅝")	(2⅝")								2⅛"	4"	4"	5"	6"	6"
60	(1⅜")	(2⅝")	(2⅝")								2⅛"	4"	4"	5"	6"	6"

HOT DIP GALVANIZED STEEL – ALL ALUMINUM COILS REFRIGERANT CONNECTIONS

Design Capacity tons	Direct Expansion R-717			Recirculated R-717						Flooded R-717					
	Liquid Feed	SST °F		Liquid Feed	SST °F					Liquid Feed	SST °F				
		30	20		30	20	-20	-30	-40		30	20	-20	-30	-40
5	½"	1"	1"	¾"	2"	2"	2"	2"	2½"	1½"	2"	2"	2"	2"	2½"
10	½"	1¼"	1¼"	¾"	2"	2"	2½"	2½"	3"	2"	2"	2½"	3"	3"	3"
15	¾"	1"	1½"	1"	2"	2"	2½"	3"	3"	2½"	2½"	2½"	3"	4"	4"
20	¾"	1½"	1½"	1"	2"	2"	3"	3"	4"	3"	3"	3"	4"	4"	4"
25	¾"	1½"	2"	1"	2"	2½"	3"	4"	4"	3"	3"	3"	4"	4"	5"
30	¾"	2"	2"	1¼"	2½"	2½"	4"	4"	4"	3"	3"	4"	4"	4"	5"
35	¾"	2"	2"	1¼"	2½"	2½"	4"	4"	5"	4"	4"	4"	5"	5"	5"
40				1¼"	2½"	2½"	4"	4"	5"	4"	4"	4"	5"	5"	5"
45				1¼"	2½"	3"	4"	4"	5"	4"	4"	4"	5"	5"	6"
50				1¼"	3"	3"	4"	4"	5"	4"	4"	4"	5"	5"	6"
55				1½"	3"	3"	4"	5"	6"	4"	4"	5"	5"	6"	6"
60				1½"	3"	3"	4"	5"	6"	4"	4"	5"	5"	6"	6"

CONNECTION DATA

- Refrigeration connection sizes may vary due to actual load, or thermal expansion valve selection.
- Direct Expansion halocarbon suction lines must be designed for oil return regardless of connection size.
- Halocarbon connections larger than 3 ⅛" will be STEEL unless otherwise specified.
- Copper tube halocarbon coils with steel connections 2 ½"or less are available.
- Connections are based on recirculated liquid temperature being the same as saturated suction tem-perature.
- Connection sizes not listed for direct expansion require special handling. Consult factory.
- Connection sizes in parenthesis (2 ⅛") may require two connections of the size shown. Connection size will be determined at time of order.

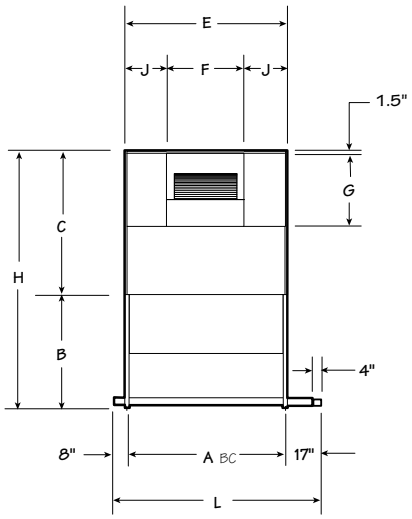

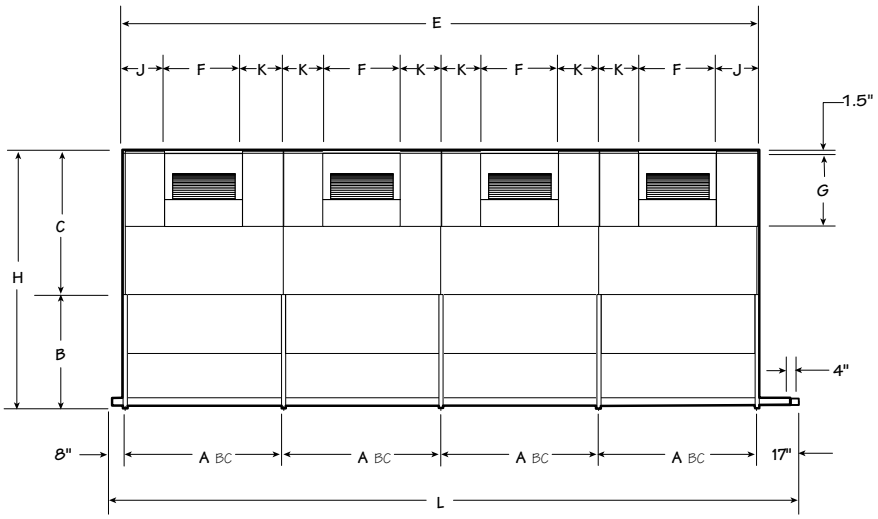

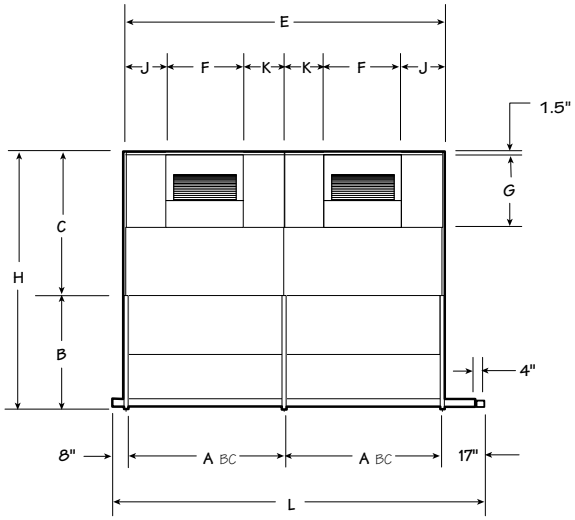

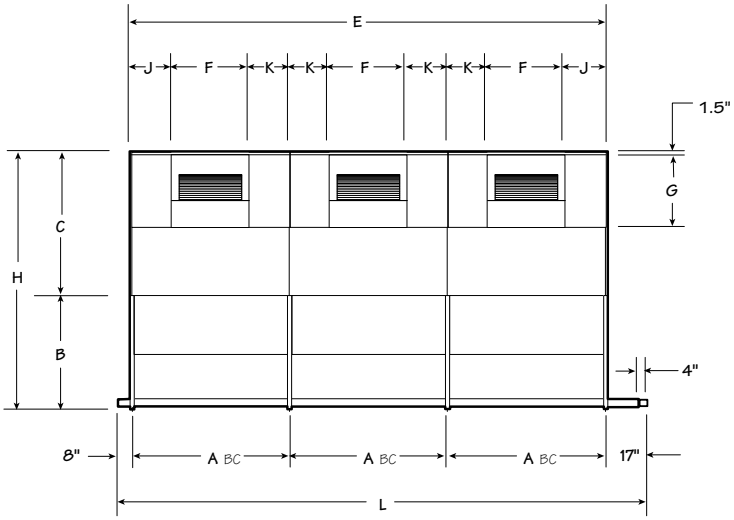

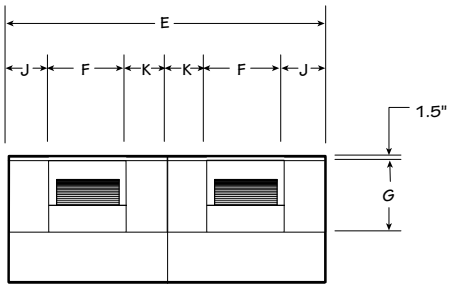

TOP AIR DISCHARGE - TYPICAL DIMENSIONS

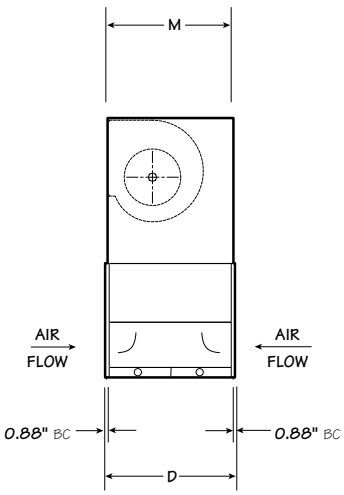

FRONT AIR DISCHARGE
AIR INLET ALL SIDES – STANDARD

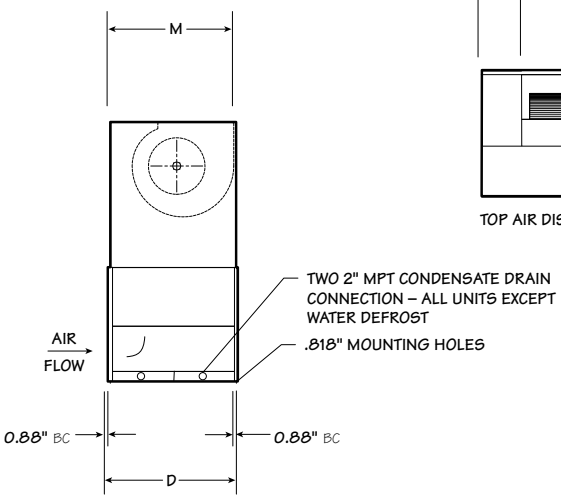

TOP AIR DISCHARGE
AIR INLET FRONT ONLY – OPTION

Model	Dimensions in											
	L	H	A	B	C	D	E	F	G	J	K	M
1F-09	70	84	45	46.5	37.5	40	48	20.62	20.5	13.69	12.19	35
IG-20	93	100.5	68	52	48.5	51	71	27.25	27.25	21.88	20.38	46
IC-24	93	110	68	56.5	53.5	59.5	71	31.25	31.25	19.88	18.38	54.5
1D-28	93	123	68	60.5	62.5	68.5	71	34.25	36.75	18.38	16.88	63.5
IA-32	93	132	68	65.5	66.5	78.5	71	34.25	42.94	18.38	16.88	73.5
2F-18	115	84	45	46.5	37.5	40	93	20.62	20.5	13.69	12.19	35
2G-31	137	100.5	56	52	48.5	51	IIS	27.25	27.25	15.88	14.38	46
2G-33	137	100.5	56	52	48.5	51	IIS	27.25	27.25	15.88	14.38	46
2C-39	137	110	56	56.5	53.5	59.5	IIS	31.25	31.25	13.88	12.38	54.5
2G-10	161	100.5	68	52	48.5	51	139	27.25	27.25	21.88	20.38	46
2H-46	137	123	56	60.5	62.5	68.5	IIS	31.75	36.75	13.63	12.13	63.5
2C-48	161	110	68	56.5	53.5	59.5	139	31.25	31.25	19.88	18.38	54.5
2H-54	137	132	56	65.5	66.5	78.5	IIS	31.75	36.75	13.63	12.13	73.5
2D-56	161	123	68	60.5	62.5	68.5	139	34.25	36.75	18.38	16.88	63.5
2A-64	161	132	68	65.5	66.5	78.5	139	34.25	42.94	18.38	16.88	73.5
2A-67	161	132	68	65.5	66.5	78.5	139	34.25	42.94	18.38	16.88	73.5
3G-47	193	100.5	56	52	48.5	51	171	27.25	27.25	15.88	14.38	46
3G-50	193	100.5	56	52	48.5	51	171	27.25	27.25	15.88	14.38	46
3C-59	193	110	56	56.5	53.5	59.5	171	31.25	31.25	13.88	12.38	54.5
3G-60	229	100.5	68	52	48.5	51	207	27.25	27.25	21.88	20.38	46
3H 69	193	123	56	60.5	62.5	68.5	171	31.75	36.75	13.63	12.13	63.5
3C-72	229	110	68	56.5	53.6	59.6	207	31.25	31.25	19.88	18.38	54.5
3H-81	193	132	56	65.5	66.5	78.5	171	31.75	36.75	13.63	12.13	73.5
3D-85	229	123	68	60.5	62.5	68.5	207	34.25	36.75	18.38	16.88	63.5
3A-96	229	132	68	65.5	66.5	78.5	207	34.25	42.94	18.38	16.88	73.5
3A-99	229	132	68	65.5	66.5	78.5	207	34.25	42.94	18.38	16.88	73.5
4G-62	249	100.5	56	52	48.5	51	227	27.25	27.25	15.88	14.38	46
4C-77	249	110	56	56.5	53.5	59.5	227	31.25	31.25	13.88	12.38	54.5
4H-93	249	123	56	60.5	62.5	68.5	227	31.75	36.75	13.63	12.13	63.5
4H-109	249	132	56	65.5	66.5	78.5	227	31.75	36.75	13.63	12.13	73.5

For primary layout only, do not use for construction.

- Add 20" to the overall height for the typical top-mounted motor location for motor sizes up to and including 10 hp. Add 20" to the overall height for motors above 10 hp.
- Front air flow shown. Top air flow are the same dimensions.
- Shaft removable from header end of unit for 1 and 2 fan units, both ends for 3 and 4 fan units.
- Water defrost applications may increase unit height depending on fan and number of rows in the coil. See individual unit drawing per order placed for final unit height.
- BC (bolt hole center/hanger)

SPX COOLING TECHNOLOGIES, INC.
827 WEST PROGRESS DRIVE
DIXON, IL 61021 USA
815 284 2700 | spxcooling@spx.com
spxcooling.com

SGS-FL-TECH-20 | ISSUED 03/2020
© 2020 SPX COOLING TECHNOLOGIES, INC | ALL RIGHTS RESERVED
In the interest of technological progress, all products are subject to design and/or material change without notice.

SPX