MARLEY®

manual del usuario

control del nivel del agua **LLC**

INSTALACIÓN – FUNCIONAMIENTO – MANTENIMIENTO

sp_Z0628617_B PUBLICADO 7/2018

LEA Y ENTIENDA ESTE MANUAL ANTES DE HACER FUNCIONAR O BRINDAR SERVICIO A ESTE PRODUCTO.

contenido

Nota

Este manual contiene información vital para la instalación y el funcionamiento correctos de los controles LLC. Lea cuidadosamente el manual antes de la instalación o el funcionamiento y siga todas las instrucciones. Guarde este manual para poder consultarlo en el futuro.

Guía de inicio rápido 4
Descripción 5
Funcionamiento 5
Función de compensación de agua 7
Interruptor HAND-OFF-AUTO 7
Componentes internos 8
Ensamble de la sonda de electrodos 9
Ilustraciones de la secuencia de funcionamiento 9
Secuencia de control de compensación de agua 10
Secuencia de alarma de nivel alto 11
Secuencia de corte de nivel alto 11
Secuencia de alarma de nivel bajo 12
Secuencia de corte de nivel bajo 12
Solución de problemas 13
Números de pieza de la sonda de electrodos 14
Números de pieza de la tarjeta de circuito de relés 15
Números de pieza 15
Diagramas de cableado 16

Los siguientes términos definidos se usan en todo este manual para alertar sobre la presencia de peligros de varios niveles de riesgo o para indicar información importante sobre la vida útil del producto.

⚠ Advertencia

Indica la presencia de un peligro que puede causar lesiones personales graves, la muerte o daños considerables a la propiedad si se lo ignora.

⚠ Precaución

Indica la presencia de un peligro que puede causar o que causará lesiones personales graves o daños considerables a la propiedad si se lo ignora.

Nota

Indica instrucciones especiales sobre la instalación, el funcionamiento o el mantenimiento que son importantes pero que no se relacionan con el peligro de sufrir lesiones personales.

introducción

El objetivo de estas instrucciones es garantizar que las conexiones en el campo se realicen de forma correcta y que el sistema de control funcione durante el máximo tiempo posible. Puesto que la garantía del producto podría depender de sus acciones, lea estas instrucciones atentamente antes de hacer funcionar el producto.

Si tiene preguntas sobre el funcionamiento y/o el mantenimiento de este sistema de control y no encuentra las respuestas en este manual, comuníquese con su representante de ventas de Marley.

⚠ **Advertencia**

Peligro de descargas eléctricas o quemaduras. Asegúrese de cortar la energía del panel antes de brindar servicio. Si trabajará en equipos fuera del panel, desconecte y bloquee usando el procedimiento de bloqueo estándar.

La seguridad primero

El sistema de control de Marley usa componentes aprobados por UL instalados de acuerdo con el Código Eléctrico Nacional. La ubicación de la torre de refrigeración y la instalación en el campo del sistema de control pueden afectar la seguridad de las personas responsables de instalar, hacer funcionar o mantener la torre y los controles. Sin embargo, debido a que SPX Cooling no controla la ubicación de la torre ni la instalación en el campo, no podemos responsabilizarnos por solucionar los problemas de seguridad que se vean afectados por estos elementos.

⚠ **Advertencia**

Las personas responsables de la instalación, el mantenimiento o la reparación de la torre y los controles deben abordar las siguientes cuestiones de seguridad:

- ***Acceso al panel de control y desde él (incluida la protección de circuitos derivados/desconexión principal suministrada por el cliente).***
- ***Conexión a tierra adecuada de los circuitos de control eléctricos.***
- ***Ajuste y protección de los circuitos derivados que alimentan el panel de control.***
- ***Calificación de las personas que instalarán, brindarán mantenimiento y servicio al equipo eléctrico.***

Estos son solo algunos de los problemas de seguridad que podrían surgir en el proceso de diseño e instalación. Marley recomienda firmemente que consulte a un ingeniero de seguridad para asegurarse de que todas las condiciones de seguridad hayan sido abordadas.

Otras cuestiones de seguridad se abordan en la información que recibió junto con la torre. Debe leer bien la información antes de instalar, mantener o reparar su torre.

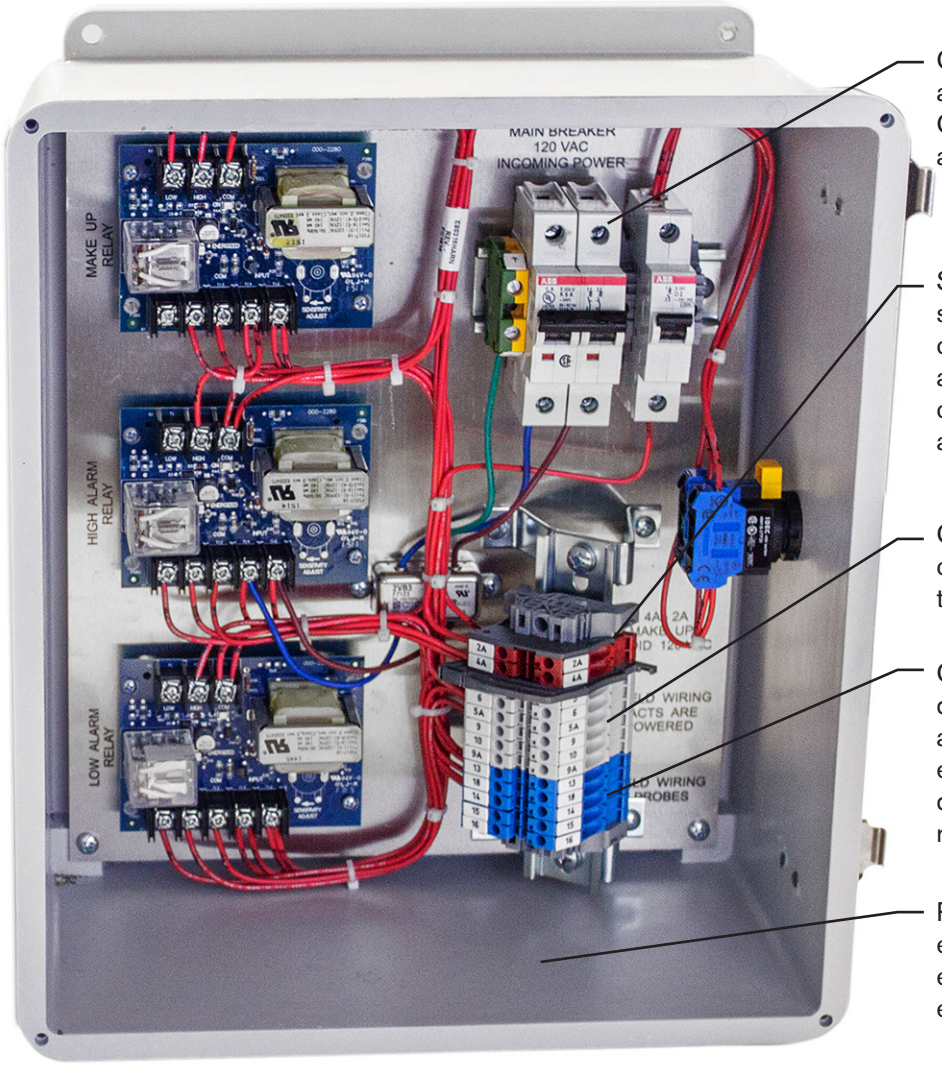

Conecte la energía de entrada aquí. El panel requiere 120 V de CA monofásica, 6 A con conexión a tierra.

Si se suministra un circuito de solenoide para la compensación, conecte los cables del solenoide aquí en los puntos 4A y 2A. Este circuito suministra 120 V de CA al solenoide.

Conecte los cables de control de corte y/o alarma a los puntos del terminal gris.

Conecte los cables de la sonda de nivel de agua a los terminales azules. En general, las sondas están ubicadas en el depósito de agua fría de la torre de refrigeración.

Para evitar que el agua ingrese en el panel de control, todas las entradas del conducto deberían estar en el fondo del recinto.

Nota: Si el panel de control tiene un interruptor selector de compensación de agua ubicado a la derecha del recinto:

Posición HAND (**MANUAL**): El solenoide se energizará. Posición OFF (**APAGADO**): El solenoide se desenergizará.

Posición AUTO: El solenoide funcionará dependiendo del nivel de agua en relación con la altura de la sonda de agua.

descripción

DIAGRAMA DEL SISTEMA

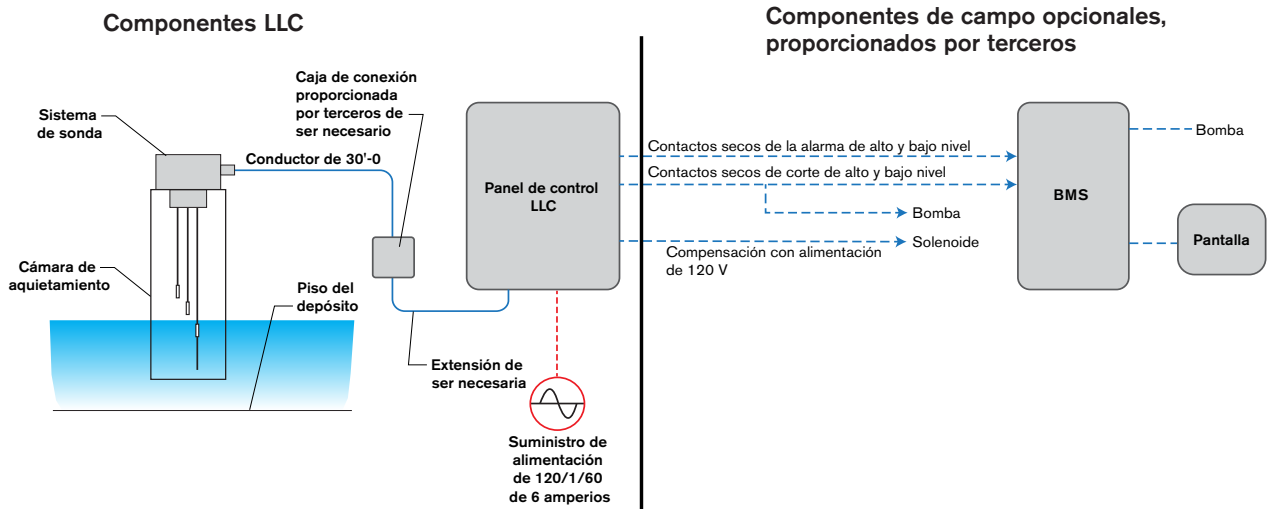

Los sistemas de control del nivel de líquido se usan para implementar cinco funciones diferentes:

- Compensación de agua
- Alarma de alto nivel de agua
- Alarma de bajo nivel de agua
- Corte de alto nivel de agua
- Corte de bajo nivel de agua

La aplicación más común del sistema de control de nivel de agua es la compensación de agua. El sistema regula la cantidad de agua en el depósito de la torre y la mantiene dentro de los niveles normales de funcionamiento. Este sistema de compensación se usa para controlar una válvula de solenoide de agua instalada de forma remota. Cuando el nivel del agua desciende por debajo del nivel prescrito y preestablecido, la válvula de solenoide se energiza mediante el sistema de control para llenar el depósito hasta su nivel adecuado.

Las alarmas de niveles alto y bajo de agua se pueden utilizar para advertir sobre niveles operativos de agua anormales. Para indicar estos tipos de alerta, el sistema de control suministra contactos secos a la interfaz con varios sistemas de control digitales o se puede conectar a indicadores de alarma suministrados por el usuario para indicar cuándo es necesario implementar una acción correctiva.

Los cortes por bajo nivel de agua se usan comúnmente para proteger las bombas de que funcionen sin el agua suficiente. Cuando el producto se usa en entornos de funcionamiento sin supervisión, el corte de bajo nivel de agua se configura para apagar la bomba y evitar reparaciones costosas. Los contactos secos se pueden cablear directamente en serie con controles piloto o con sistemas de control digital para iniciar el apagado de equipos protegidos en situaciones de bajo nivel de agua.

Funcionamiento

El sistema de control de nivel de agua LLC consiste en relés de detección de líquido especializados en una o más tarjetas de circuitos conectadas al ensamble de una sonda ubicada en el depósito de agua fría. Cada tarjeta de circuito contiene un relé, y cada una de estas tarjetas especializadas emite una señal externa. Cada relé proporciona un contacto seco de “Forma C” normalmente abierto y normalmente cerrado. La tarjeta de circuitos activa el relé usando continuidad “a través del agua” mediante las sondas de detección ubicadas en el depósito de agua fría de la torre de refrigeración.

Al utilizar la capacidad del agua para conducir electricidad, se puede crear una trayectoria de circuito entre una punta de la sonda y la otra. La corriente se conduce a través del agua entre sondas que tienen largos diferentes. Una sonda común o de referencia está presente en todos los sistemas y es compartida por todas las funciones del sistema. Esta sonda se puede identificar por su longitud. Es la sonda más larga del sistema y tiene la mayor profundidad dentro del depósito. La trayectoria de la corriente pasa entre las demás puntas de la sonda y la “común”. Cuando el nivel del agua alcanza la sonda más corta, el circuito se completa y el relé responde abriendo o cerrando los contactos del relé de acuerdo con un nivel fijo. Para el control de nivel bajo, la sonda de referencia conectada a tierra y una sonda levemente más corta proporcionan el circuito. Cuando el nivel de agua desciende por debajo de esta punta, la continuidad entre esta sonda y la sonda de referencia se interrumpe, y los contactos del relé transfieren la información. La distancia desde la punta de la sonda de nivel bajo hasta el piso del depósito determina el nivel de agua mínimo permitido antes de que la alarma suene o de que el funcionamiento de la bomba se interrumpa.

La cantidad de sondas adicionales es determinada por la aplicación. Por ejemplo, en un sistema de “compensación de agua”, hay tres sondas. Una sonda de referencia y dos sondas estándar o de punta corta. La punta de la sonda de referencia, generalmente, está ubicada levemente por encima del piso del depósito, y las puntas de las sondas adicionales están ubicadas en alturas diferentes determinadas por su función específica. El sistema de compensación tendría una sonda a una altura para comenzar a llenar el depósito y otra sonda ubicada más alta para completar o detener el llenado. Una sonda de alarma de nivel alto o de corte de nivel alto estaría ubicada a un nivel que le permita activarse cuando el agua del depósito supere su nivel de funcionamiento normal y, lógicamente, una alarma de nivel bajo o de corte de nivel bajo estaría ubicada en un lugar que le permita detectar el nivel de agua bajo más cerca del fondo del depósito. Nuevamente, la señalización se logra de dos maneras. Las tarjetas de nivel alto y de compensación reaccionan cuando el agua suministra un circuito completo o continuidad entre su sensor y la sonda de referencia. El segundo tipo de señal es para la detección de nivel bajo. Las tarjetas de nivel bajo reaccionan cuando no hay agua y se abre el circuito o se interrumpe el flujo de corriente entre la sonda y la referencia.

funcionamiento

Un sistema de control de nivel de agua se puede configurar para cumplir con varios requisitos de combinación. Debido a que cada tarjeta de circuito es responsable de cada función, el tamaño y el sistema de circuitos varía en proporción a la cantidad de funciones deseadas. Por ejemplo, un control de compensación de nivel de agua requiere un panel de control con una tarjeta de relés de circuito y tres sondas. Un sistema configurado para compensación de agua, que incluye una alarma de nivel alto y una alarma de nivel bajo, requiere tres tarjetas de circuito y cinco sondas: una tarjeta de circuito para la opción de compensación de agua, una para el funcionamiento de nivel alto y otra para el de nivel bajo.

Función de compensación de agua

Un sistema que estuviera diseñado solo para indicar corte y/o alarma no estaría equipado con la función de compensación de agua.

El sistema de circuitos para compensación de agua en el panel de control LLC viene con un disyuntor independiente para la conexión directa a una válvula de solenoide de agua de 110-120 V de CA. Esta función añadida permite la instalación del cliente sin tener que proporcionar un circuito de energía adicional para energizar el solenoide. El solenoide se conecta a los terminales 2A y 4A como se muestra en el diagrama de cableado específico del control.

Objetivo y función del interruptor HAND-OFF-AUTO (MANUAL-APAG.-AUTO)

A la derecha del recinto de control está ubicado el interruptor HAND-OFF-AUTO. Este interruptor se usa principalmente durante los procedimientos de puesta en marcha y mantenimiento de la torre de refrigeración, cuando el depósito de la torre está vacío o se ha drenado. Cuando es necesario llenar el depósito de la torre manualmente, el interruptor se coloca en la posición HAND. Esta selección puentea la retroalimentación del ensamble de la sonda y energiza directamente la válvula de solenoide conectada al suministro de agua. Una vez que el depósito de la torre de refrigeración está lleno, el interruptor se coloca en la posición AUTO para permitir que el ensamble de la sonda ajustado controle y mantenga el nivel de funcionamiento adecuado. Al colocar el interruptor en la posición OFF, se interrumpe completamente cualquier función de supervisión o llenado que normalmente lleva a cabo el panel de control LLC. El funcionamiento normal de la torre depende de que el interruptor HAND-OFF-AUTO se coloque en el modo AUTO en todo momento.

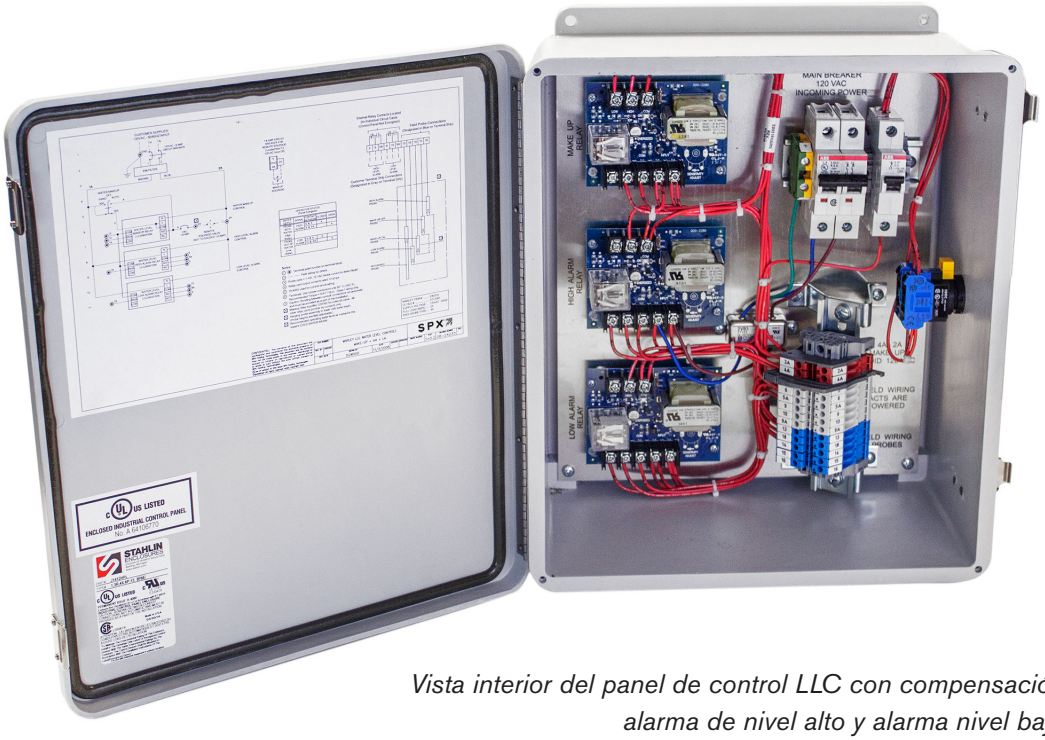

Vista interior del panel de control LLC con compensación, alarma de nivel alto y alarma nivel bajo.

Componentes internos del panel de control LLC

Los paneles de control LLC están construidos según las normas de UL y CUL, y están diseñados para proporcionar las numerosas configuraciones necesarias para las aplicaciones de torres de refrigeración. Todos los paneles de control LLC incluyen un disyuntor principal con un disyuntor adicional y un interruptor HAND-OFF-AUTO suministrado cuando el sistema incluye un circuito de compensación de agua. El disyuntor adicional proporciona un circuito de control exclusivo para la válvula de solenoide de agua de 120 V de CA. Las tarjetas de relés de circuitos de nivel alto y nivel bajo y las conexiones apropiadas de los terminales son el resto de los componentes necesarios para la configuración específica. La regleta de terminales elevada facilita el acceso para realizar las conexiones necesarias del ensamble de sondas de agua y la interfaz del cliente.

funcionamiento

Ensamble de sondas de electrodos de acero inoxidable

Las puntas de las sondas de electrodos son de acero inoxidable y cuelgan de un recinto de PVC no corrosivo con 6 metros de cable para cada sonda. Una cámara de amortiguación galvanizada o de acero inoxidable está instalada sobre las sondas para calmar el agua y poder tomar lecturas precisas.

Ilustraciones que describen la secuencia de funcionamiento

Las próximas tres páginas son ilustraciones simplificadas que representan la secuencia de funcionamiento para cada tipo de tarjeta de circuitos.

Página 10 – Compensación

Página 11 – Alarma de nivel alto– Corte de nivel alto

Página 12 – Alarma de nivel bajo– Corte de nivel bajo

Cada tarjeta de circuitos de relés tiene dos luces indicadoras verdes. La luz ON (encendido) indica que la tarjeta está encendida y lista para funcionar. La luz ENERGIZED (activado) indica que el sistema de sonda está funcionando y se lo debe utilizar en caso de problemas.

Control de compensación de agua - Secuencia de funcionamiento - Tarjeta B

Interruptor selector en posición AUTO (automática)

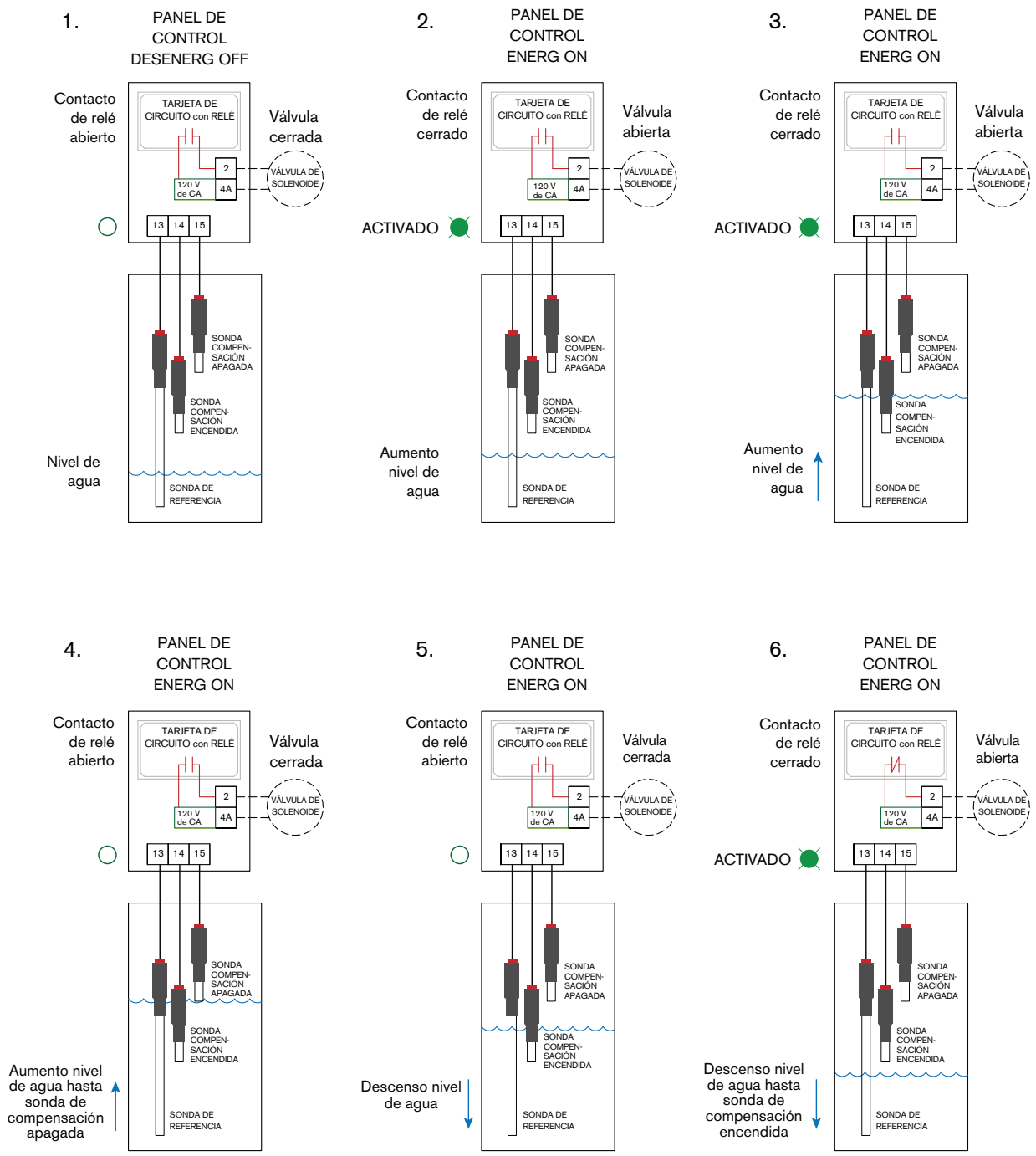

Alarma de nivel alto - Secuencia de funcionamiento - Tarjeta B

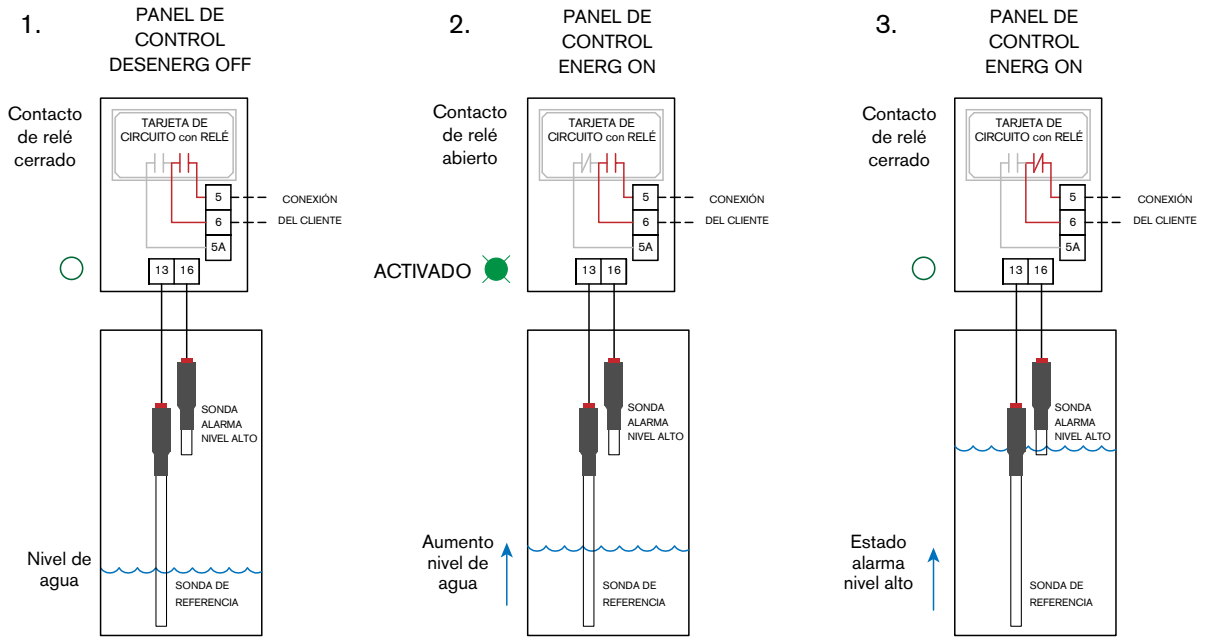

Corte de nivel alto - Secuencia de funcionamiento - Tarjeta B

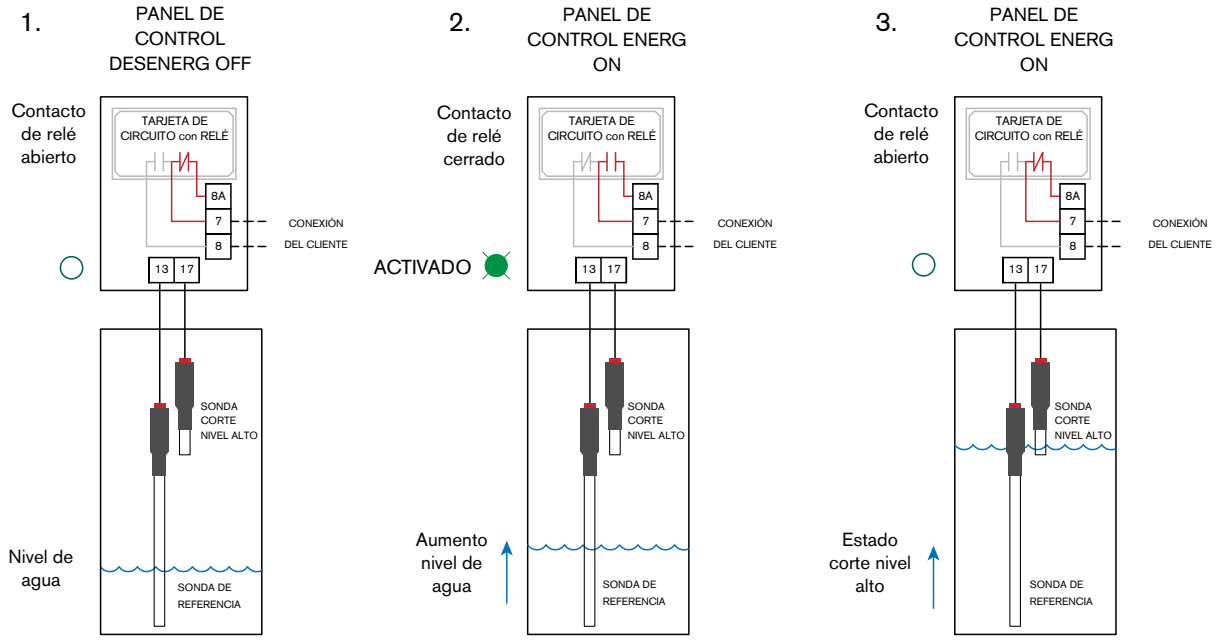

Alarma de nivel bajo - Secuencia de funcionamiento - Tarjeta A

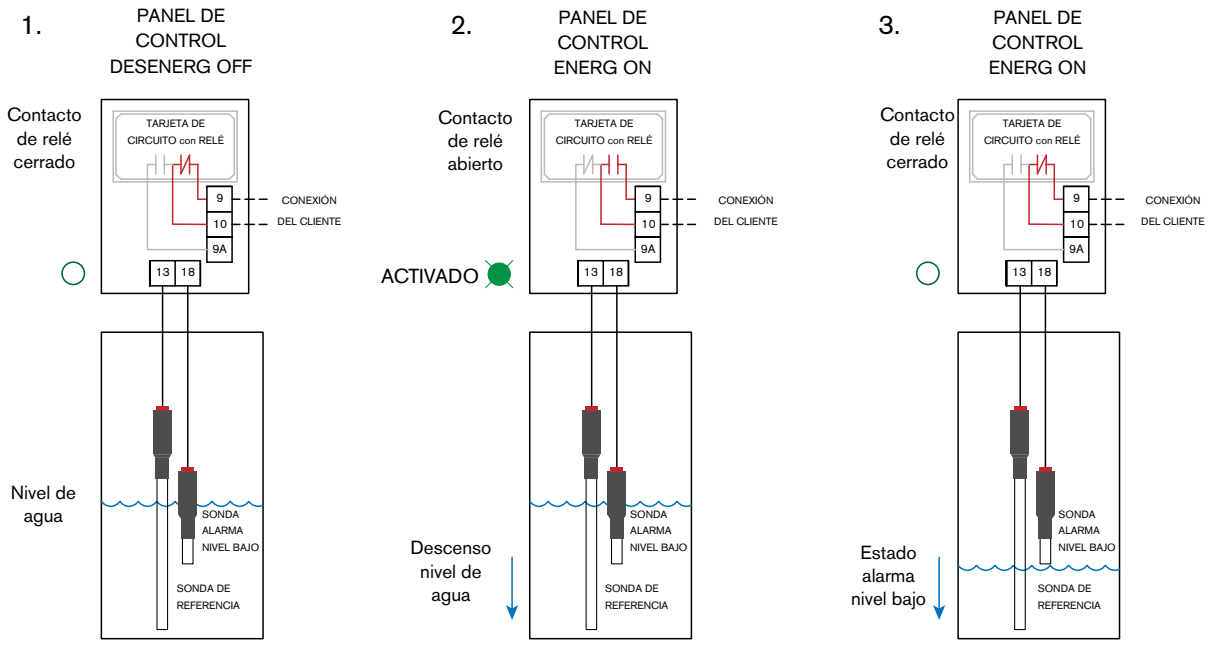

Corte de nivel bajo - Secuencia de funcionamiento - Tarjeta A

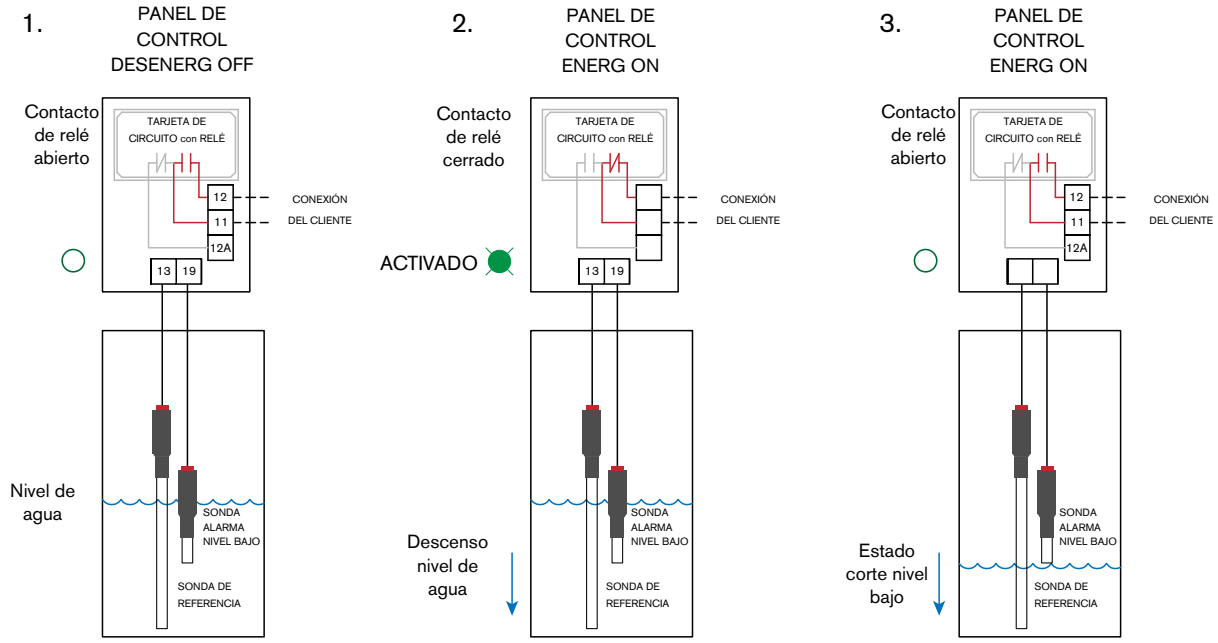

solución de problemas

El panel de control se sometió a prueba antes del envío y la mayoría de los problemas no corresponden al panel de control, por ejemplo, conexiones correctas de la sonda al panel de control y altura de la punta de la sonda en el depósito de la torre de enfriamiento.

Para solucionar los problemas del sistema, verifique lo siguiente:

- Verifique la altura de la sonda en la cámara de aquietamiento. Los niveles pueden estar configurados de fábrica, pero, en caso de dudas, consulte con su representante de ventas de Marley para obtener información sobre la altura del nivel. La altura del cable de la sonda está sujeta mediante un sujetador para cables ajustable ubicado dentro de la caja de conductos en la parte superior de la cámara de aquietamiento.
- Verifique que los cables de la sonda estén conectados de manera correcta en la regleta de terminales del usuario ubicada dentro del panel de control. Cada cable de sonda tiene impreso un número de identificación en el aislamiento negro cada pocas pulgadas. Por ejemplo, la sonda de referencia es siempre no. 13 y se debe conectar al punto terminal no. 13 del panel de control.
- Si se hacen extensiones de los cables de la sonda en el lugar, asegúrese de que el cable de extensión tenga el número correcto y que las conexiones estén seguras.
- Con el tiempo, es posible que se acumulen contaminantes en las puntas de las sondas. Limpie las puntas con una esponja abrasiva y asegúrese de que estén atornilladas de manera que la conexión sea correcta.
- De proporcionarse, el interruptor selector de compensación al costado del panel de control debe estar en posición AUTO.

Verificación del circuito de energía del solenoide de compensación

- Gire el interruptor selector a la posición HAND (manual). El solenoide se debe activar para que el agua de compensación fluya hacia el bucle de refrigeración. Dentro del panel de control, hay un disyuntor de un solo polo que debe estar en posición ON para alimentar al circuito.

Verificación del funcionamiento del panel de control

- Para determinar si el panel de control funciona según el diseño, verifique las luces LED verdes de cada tarjeta de circuitos y observe el cambio de estado de los relés transparentes ubicados en cada tarjeta de nivel. Consulte las tablas de las páginas 10 a 12 para obtener información sobre la secuencia de funcionamiento de las luces LED.
- Otro método es extraer el cable de la sonda de la regleta de terminales y simular el nivel del agua utilizando puentes en los puntos terminales de la sonda. Por ejemplo, un puente del no. 13 al no. 16 indicaría una alarma de alto nivel de agua.

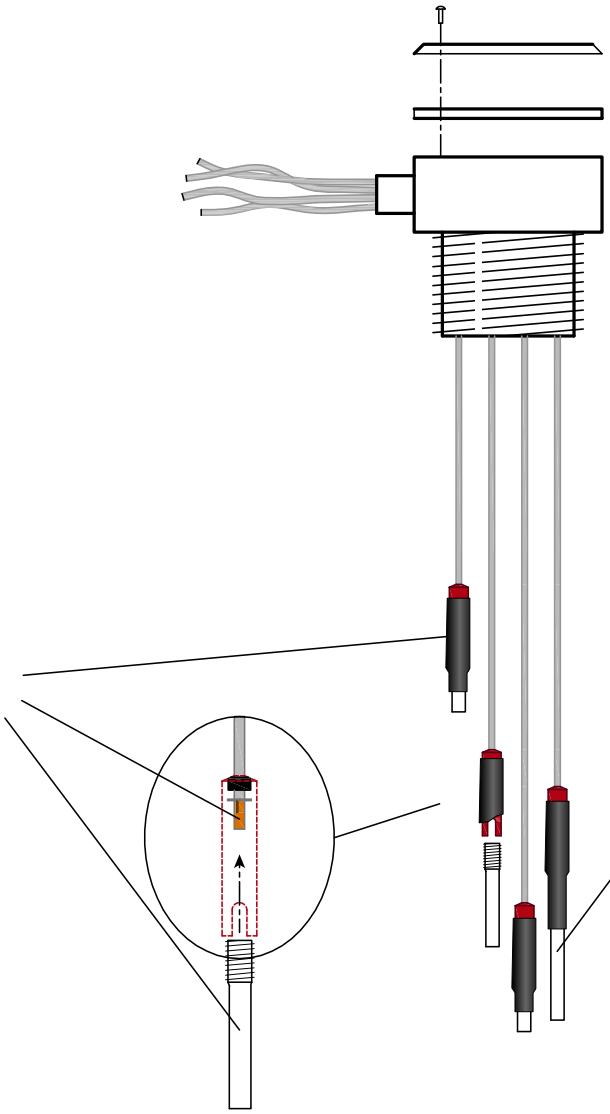

Ensamble de las sondas de electrodos

Los números de pieza adicionales se pueden encontrar en la página siguiente.

lista de piezas

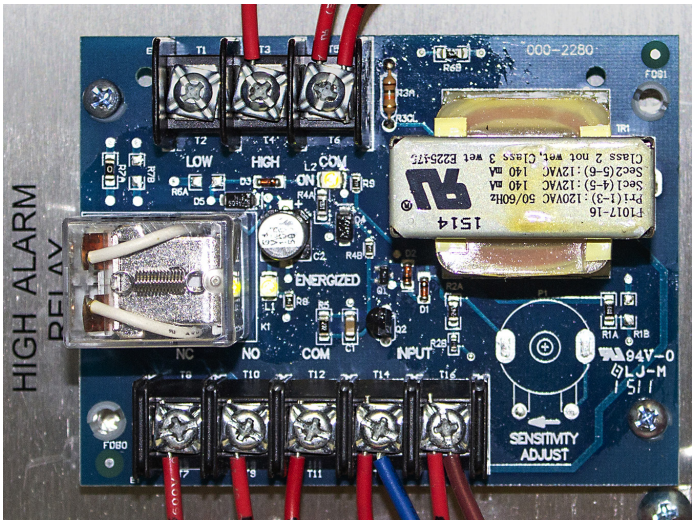

Tarjeta de circuito de relés

Número de parte **D55194** – Se usa para compensación, alarma de nivel alto y corte de nivel alto (LLC24B2F50N)

Número de parte **D55195** – Se usa para alarma de nivel bajo y corte de nivel bajo (LLC24A2F50N)

Numero de Parte	Descripción
2038884	Interruptor H-O-A
D55194	Tarjeta de relés de compensación
D55194	Tarjeta de relés de alarma de nivel alto
D55194	Tarjeta de relés de corte de nivel alto
D55195	Tarjeta de relés de alarma de nivel bajo
D55195	Tarjeta de relés de corte de nivel bajo
C74516	Sensor de sonda estándar (completo con punta y cable de 6m)
D20711	Sensor de sonda estándar (completo con punta y cable de 15m)
D20707	Sensor de sonda de tierra/referencia (completo con punta y cable de 6m)
D20712	Sensor de sonda de tierra/referencia (completo con punta y cable de 15m)
D20643	Punta de acero inoxidable del sensor de sonda estándar
D20718	Punta de acero inoxidable del sensor de sonda de tierra/referencia
203887	Juego de bloques de terminales (dos grises, dos azules y uno de extremo)
D81756	Filtro EMI
D20707	Referencia No. 13
2220852	Compensación encendida No. 14
2220854	Compensación apagada No. 15
2220855	Alarma de alto nivel No. 16
2220856	Corte de alto nivel No. 17
2220857	Alarma de bajo nivel No. 18
2220859	Corte de bajo nivel No. 19
C74516	Cable de nivel genérico

diagramas de cableado – contenido

Número de Dibujo	Descripción	Página
08-24248	Compensación Alarma de Alto Corte de Alto Nivel Alarma de Bajo Corte de Bajo Nivel	17
08-24233	Compensación Alarma de Alto Alarma de Bajo	18
08-24218	Compensación	19
08-24219	Alarma de Alto	20
08-24220	Alarma de Bajo	21
08-24221	Corte de Alto Nivel	22
08-24222	Corte de Bajo Nivel	23
08-24230	Corte de Alto Nivel Alarma de Bajo	24
08-24231	Corte de Bajo Nivel Alarma de Bajo	25
08-24232	Corte de Alto Nivel Corte de Bajo Nivel	26
08-24228	Corte de Alto Nivel Alarma de Alto	27
08-24229	Corte de Bajo Nivel Alarma de Alto	28
08-24225	Compensación Corte de Alto Nivel	29
08-24224	Compensación Alarma de Bajo	30
08-24223	Compensación Alarma de Alto	31
08-24234	Compensación Alarma de Alto Corte de Alto Nivel	32
08-24235	Compensación Alarma de Alto Corte de Bajo Nivel	33
08-24236	Compensación Corte de Alto Nivel Alarma de Bajo	34
08-24237	Compensación Alarma de Bajo Corte de Bajo Nivel	35
08-24238	Compensación Corte de Alto Nivel Corte de Bajo Nivel	36
08-24239	Alarma de Alto Corte de Alto Nivel Alarma de Bajo	37
08-24240	Alarma de Alto Alarma de Bajo Corte de Bajo Nivel	38
08-24241	Alarma de Alto Corte de Alto Nivel Corte de Bajo Nivel	39
08-24242	Corte de Alto Nivel Alarma de Bajo Corte de Bajo Nivel	40
08-24243	Compensación Alarma de Alto Corte de Alto Nivel Alarma de Bajo	41
08-24244	Compensación Alarma de Alto Alarma de Bajo Corte de Bajo Nivel	42
08-24245	Compensación Alarma de Alto Corte de Alto Nivel Corte de Bajo Nivel	43
08-24246	Compensación Corte de Alto Nivel Alarma de Bajo Corte de Bajo Nivel	44
08-24247	Alarma de Alto Corte de Alto Nivel Alarma de Bajo Corte de Bajo Nivel	45

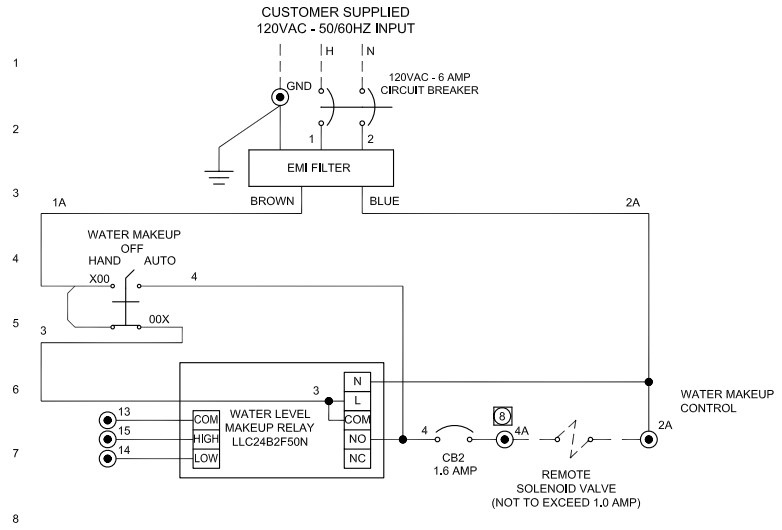

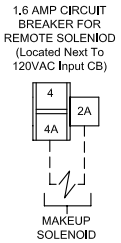

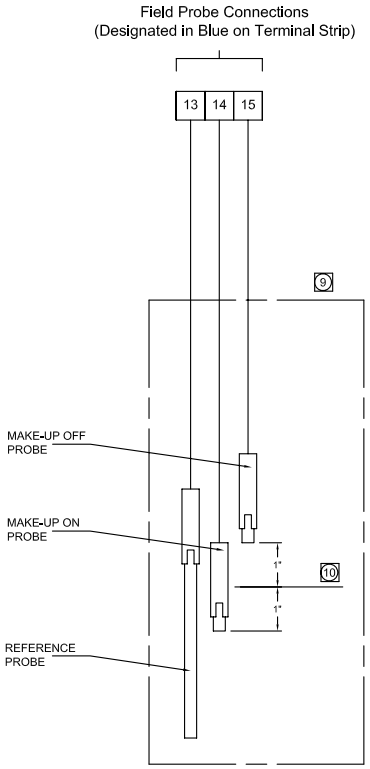

Notes:

1. Terminal point number on terminal block.
2. Field wiring by others.
3. Probe uses < 1 mA, 12 VAC trickle current to detect liquid.
4. Relay card output contacts rated 10 amps.
5. 18 AWG used for control circuit wiring.
6. Terminals: Use copper conductors only 60° C (140° F). Recommended Torque = 4.4-7.1 lb.in. Class 1 wirng only.
7. Caution: Bonding between conduit connections not automatic and must be provided as a part of the installation.
8. Makeup relay supplies 120VAC for solenoid valve.
9. Hanging probe assembly in tower cold water basin. (Probe heights are field adjustable.)
10. Recommended operating water level as marked in the tower's COLD WATER BASIN.

MARLEY ITEM #: E80300
UL FILE #: E312361
SUPPLY VOLTAGE: .. 120vAC - 60HZ
FULL LOAD AMPS: 2A
ENCLOSURE TYPE: .. 4X

CONFIDENTIAL: The contents of this document are confidential and constitute the exclusive property of SPX Cooling Technologies. This document and its contents may not be made public in any manner, distributed or loaned to others, or reproduced or copied either in whole or part without the prior written consent of SPX Cooling Technologies.
© as of date(s) in title block SPX Cooling Technologies
Unpublished–All rights reserved under copyright laws.

ECO NUMBER		MARLEY LLC WATER LEVEL CONTROLS MAKE–UP				SPX. COOLING TECHNOLOGIES			
REV. BY	CHECKED								
REV. DATE		DRAWN BY	DATE	CHECKED	APPROVED	ORDER NUMBER	PLOT	DRAWING NUMBER	REV.
		DGWOOD	11/25/2008				1=5.2	08–24218	

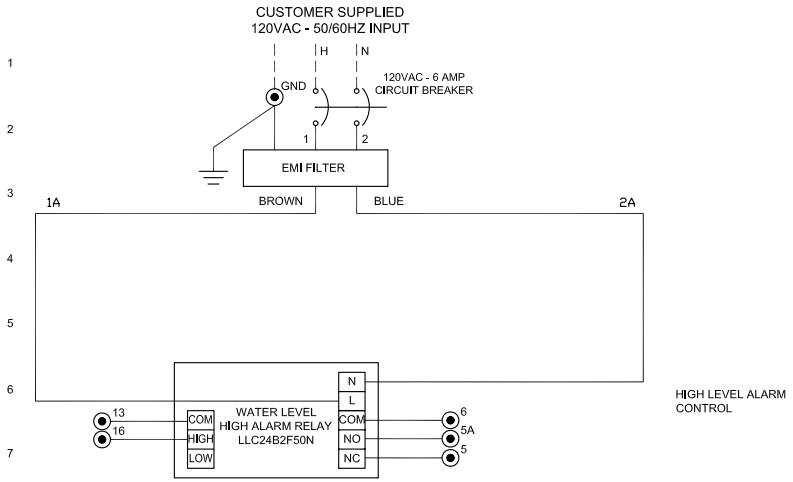

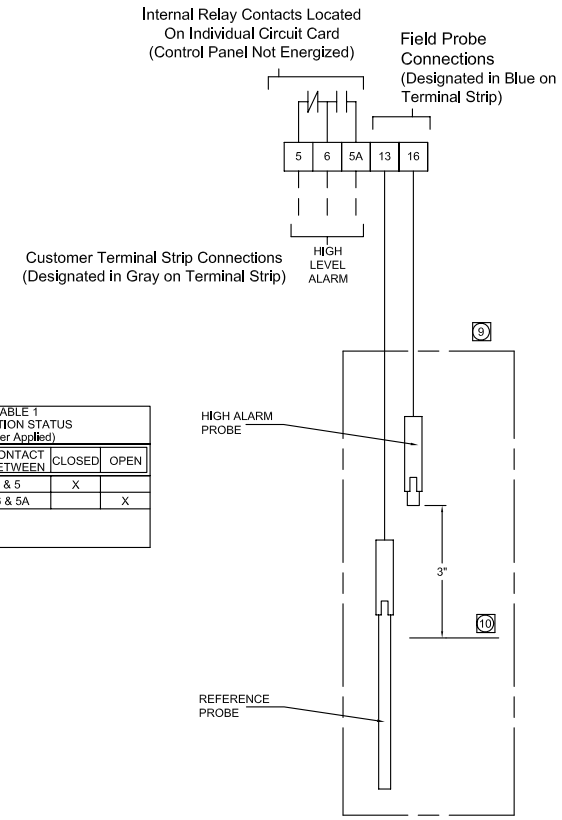

TABLE 1
OPERATION STATUS
(Power Applied)

WATER DEPTH	SIGNAL	CONTACT BETWEEN	CLOSED	OPEN
PROBE INTO WATER (High Water)	HIGH ALARM	6 & 5	X	
		6 & 5A		X

Notes:

1. Terminal point number on terminal block.
2. Field wiring by others.
3. Probe uses < 1 mA, 12 VAC trickle current to detect liquid.
4. Relay card output contacts rated 10 amps.
5. 18 AWG used for control circuit wiring.
6. Terminals: Use copper conductors only 60° C (140° F). Recommended Torque = 4.4-7.1 lb.in. Class 1 wirng only.
7. Caution: Bonding between conduit connections not automatic and must be provided as a part of the installation.
8. Relay card provides dry contacts only.
9. Hanging probe assembly in tower cold water basin. (Probe heights are field adjustable.)
10. Recommended operating water level as marked in the tower's COLD WATER BASIN.

MARLEY ITEM #: E80301
UL FILE #: E312361
SUPPLY VOLTAGE: .. 120vAC - 60HZ
FULL LOAD AMPS: 2A
ENCLOSURE TYPE: .. 4X

CONFIDENTIAL: The contents of this document are confidential and constitute the exclusive property of SPX Cooling Technologies. This document and its contents may not be made public in any manner, distributed or loaned to others, or reproduced or copied either in whole or part without the prior written consent of SPX Cooling Technologies.
© as of date(s) in title block SPX Cooling Technologies
Unpublished–All rights reserved under copyright laws.

ECO NUMBER		MARLEY LLC WATER LEVEL CONTROLS HIGH LEVEL ALARM				SPX COOLING TECHNOLOGIES			
REV. BY	CHECKED								
REV. DATE		DRAWN BY	DATE	CHECKED	APPROVED	ORDER NUMBER	PLOT	DRAWING NUMBER	REV.
		DGWOOD	11/25/2008				1=5.2	08–24219	

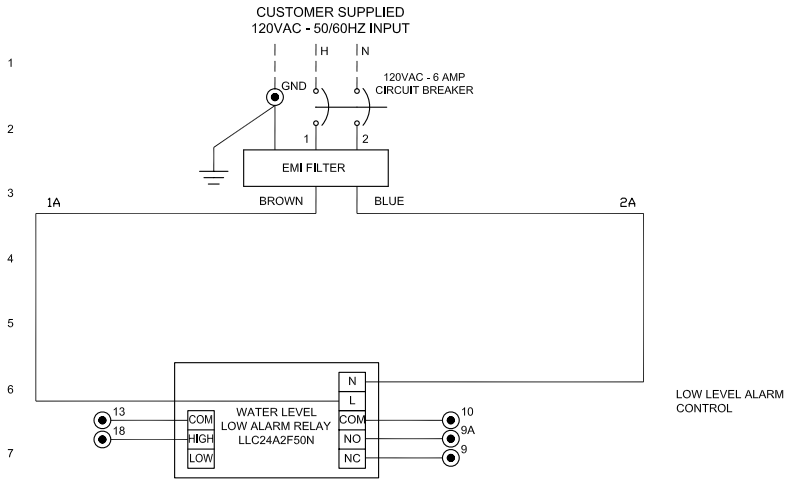

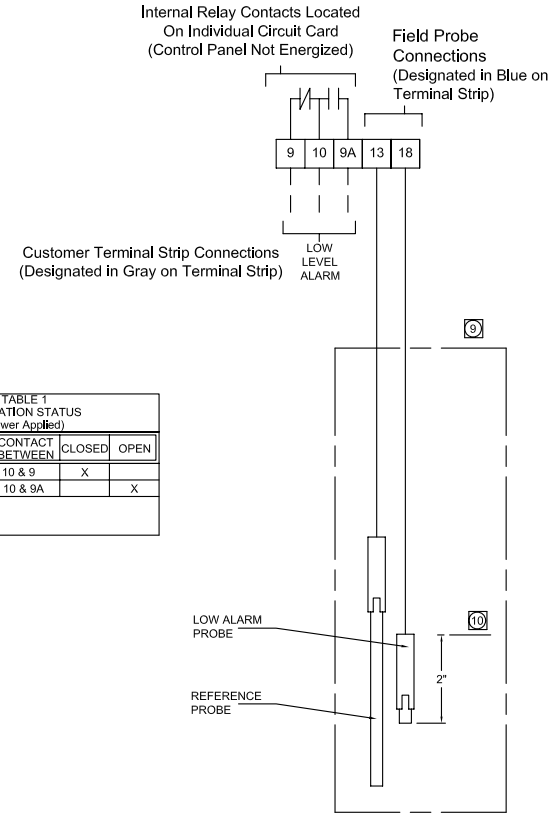

TABLE 1
OPERATION STATUS
(Power Applied)

WATER DEPTH	SIGNAL	CONTACT BETWEEN	CLOSED	OPEN
PROBE OUT OF WATER (Low Water)	LOW ALARM	10 & 9	X	
		10 & 9A		X

Notes:

1. Terminal point number on terminal block.
2. Field wiring by others.
3. Probe uses < 1 mA, 12 VAC trickle current to detect liquid.
4. Relay card output contacts rated 10 amps.
5. 18 AWG used for control circuit wiring.
6. Terminals: Use copper conductors only 60° C (140° F). Recommended Torque = 4.4-7.1 lb.in. Class 1 wirng only.
7. Caution: Bonding between conduit connections not automatic and must be provided as a part of the installation.
8. Relay card provides dry contacts only.
9. Hanging probe assembly in tower cold water basin. (Probe heights are field adjustable.)
10. Recommended operating water level as marked in the tower's COLD WATER BASIN.

MARLEY ITEM #: E80302
UL FILE #: E312361
SUPPLY VOLTAGE: .. 120vAC - 60HZ
FULL LOAD AMPS: 2A
ENCLOSURE TYPE: .. 4X

CONFIDENTIAL: The contents of this document are confidential and constitute the exclusive property of SPX Cooling Technologies. This document and its contents may not be made public in any manner, distributed or loaned to others, or reproduced or copied either in whole or part without the prior written consent of SPX Cooling Technologies.
© as of date(s) in title block SPX Cooling Technologies
Unpublished–All rights reserved under copyright laws.

ECO NUMBER		MARLEY LLC WATER LEVEL CONTROLS LOW LEVEL ALARM				SPX. COOLING TECHNOLOGIES			
REV. BY	CHECKED								
REV. DATE		DRAWN BY	DATE	CHECKED	APPROVED	ORDER NUMBER	PLOT	DRAWING NUMBER	REV.
		DGWOOD	11/25/2008				1=5.2	08–24220	

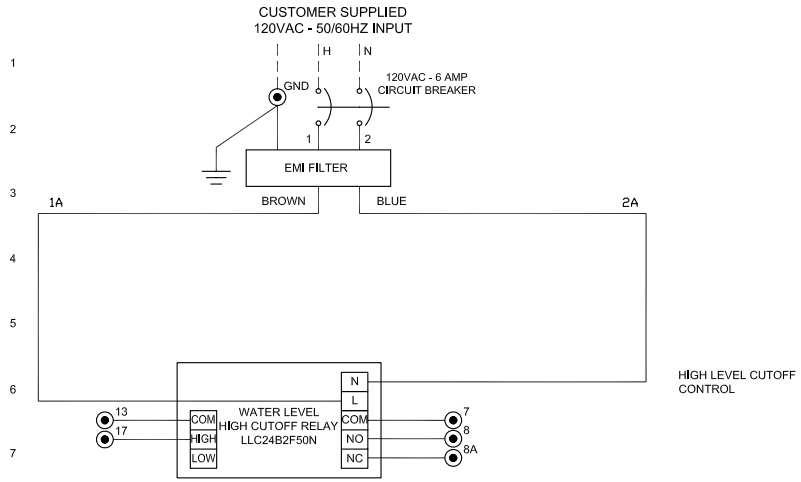

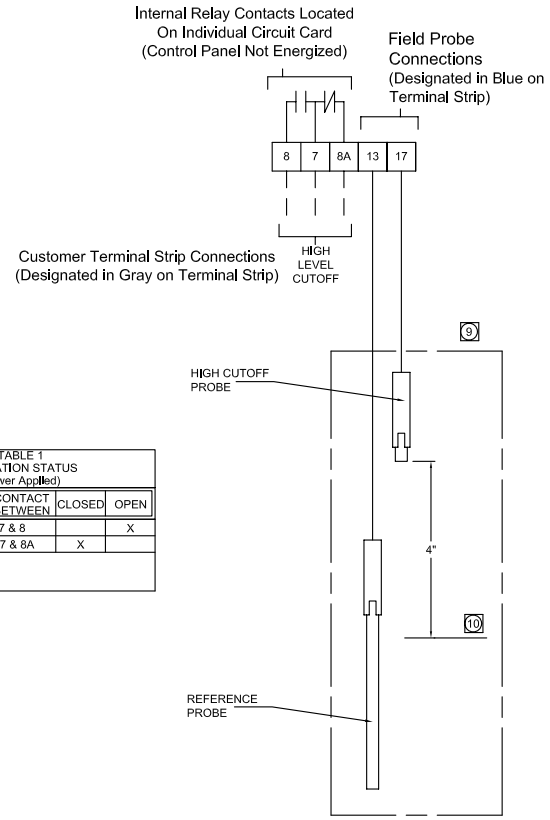

TABLE 1
OPERATION STATUS
(Power Applied)

WATER DEPTH	SIGNAL	CONTACT BETWEEN	CLOSED	OPEN
PROBE INTO WATER (High Water)	HIGH CUTOFF	7 & 8		X
		7 & 8A	X	

Notes:

1. Terminal point number on terminal block.
2. Field wiring by others.
3. Probe uses < 1 mA, 12 VAC trickle current to detect liquid.
4. Relay card output contacts rated 10 amps.
5. 18 AWG used for control circuit wiring.
6. Terminals: Use copper conductors only 60° C (140° F). Recommended Torque = 4.4-7.1 lb.in. Class 1 wirng only.
7. Caution: Bonding between conduit connections not automatic and must be provided as a part of the Installation.
8. Relay card provides dry contacts only.
9. Hanging probe assembly in tower cold water basin. (Probe heights are field adjustable.)
10. Recommended operating water level as marked in the tower's COLD WATER BASIN.

MARLEY ITEM #: E80303
UL FILE #: E312361
SUPPLY VOLTAGE: .. 120vAC - 60HZ
FULL LOAD AMPS: 2A
ENCLOSURE TYPE: .. 4X

CONFIDENTIAL: The contents of this document are confidential and constitute the exclusive property of SPX Cooling Technologies. This document and its contents may not be made public in any manner, distributed or loaned to others, or reproduced or copied either in whole or part without the prior written consent of SPX Cooling Technologies.
© as of date(s) in title block SPX Cooling Technologies
Unpublished–All rights reserved under copyright laws.

ECO NUMBER		MARLEY LLC WATER LEVEL CONTROLS HIGH LEVEL CUTOFF				SPX COOLING TECHNOLOGIES			
REV. BY	CHECKED								
REV. DATE		DRAWN BY	DATE	CHECKED	APPROVED	ORDER NUMBER	PLOT	DRAWING NUMBER	REV.
		DGWOOD	11/28/2008				1=5.2	08–24221	

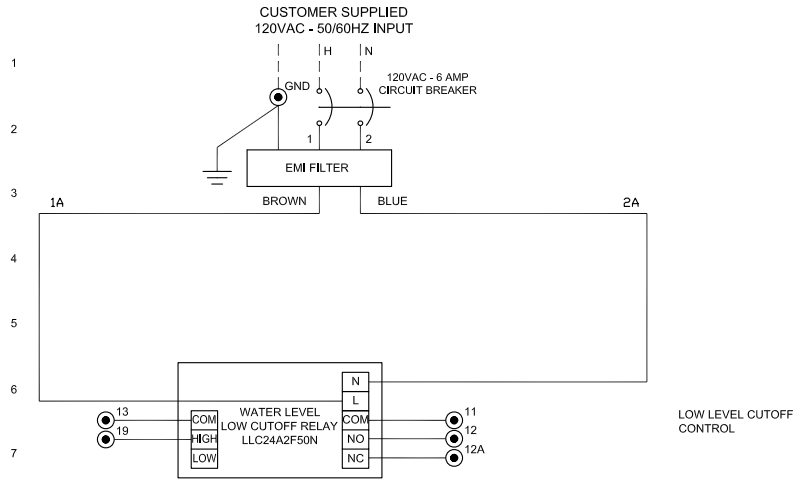

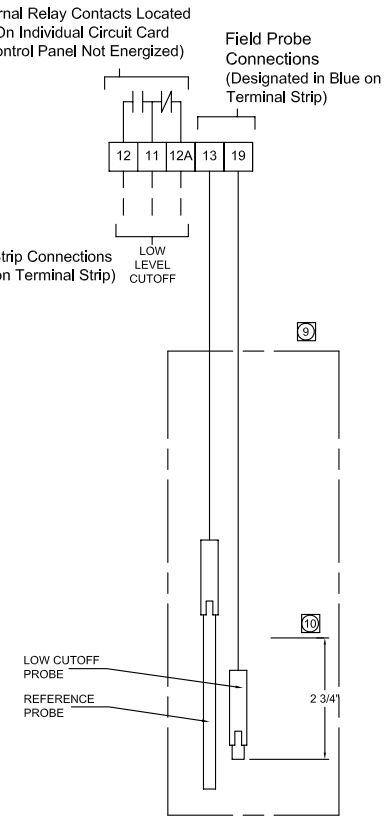

TABLE 1
OPERATION STATUS
(Power Applied)

WATER DEPTH	SIGNAL	CONTACT BETWEEN	CLOSED	OPEN
PROBE OUT OF WATER (Low Water)	LOW CUTOFF	11 & 12		X
		11 & 12A	X	

Notes:

1. Terminal point number on terminal block.
2. Field wiring by others.
3. Probe uses < 1 mA, 12 VAC trickle current to detect liquid.
4. Relay card output contacts rated 10 amps.
5. 18 AWG used for control circuit wiring.
6. Terminals: Use copper conductors only 60° C (140° F). Recommended Torque = 4.4-7.1 lb.in. Class 1 wirng only.
7. Caution: Bonding between conduit connections not automatic and must be provided as a part of the installation.
8. Relay card provides dry contacts only.
9. Hanging probe assembly in tower cold water basin. (Probe heights are field adjustable.)
10. Recommended operating water level as marked in the tower's COLD WATER BASIN.

MARLEY ITEM #: E80304
UL FILE #: E312361
SUPPLY VOLTAGE: .. 120vAC - 60HZ
FULL LOAD AMPS: 2A
ENCLOSURE TYPE: .. 4X

CONFIDENTIAL: The contents of this document are confidential and constitute the exclusive property of SPX Cooling Technologies. This document and its contents may not be made public in any manner, distributed or loaned to others, or reproduced or copied either in whole or part without the prior written consent of SPX Cooling Technologies.
© as of date(s) in title block SPX Cooling Technologies
Unpublished–All rights reserved under copyright laws.

ECO NUMBER		MARLEY LLC WATER LEVEL CONTROLS LOW LEVEL CUTOFF				SPX. COOLING TECHNOLOGIES			
REV. BY	CHECKED								
REV. DATE		DRAWN BY	DATE	CHECKED	APPROVED	ORDER NUMBER	PLOT	DRAWING NUMBER	REV.
		DGWOOD	08/25/2008				1=5.2	08–24222	

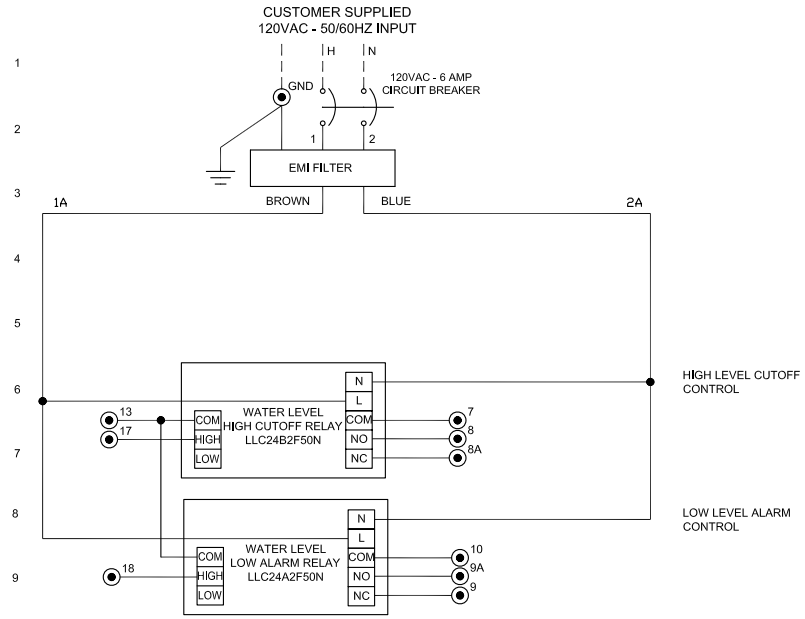

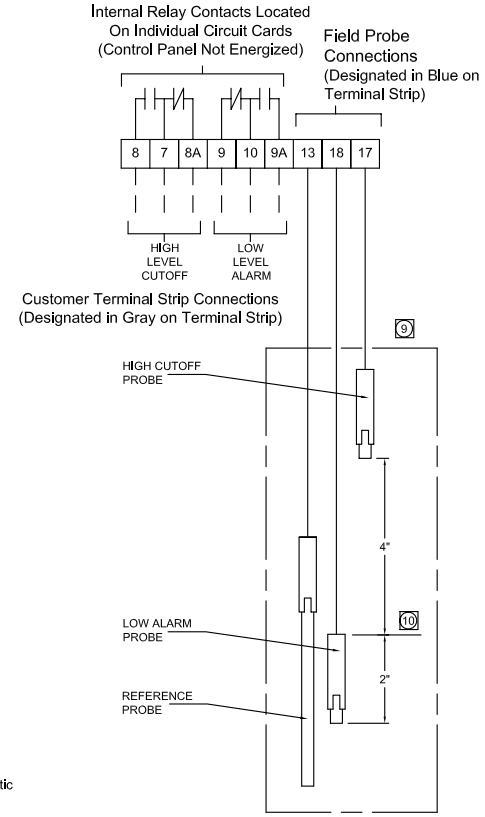

TABLE 1
OPERATION STATUS
(Power Applied)

WATER DEPTH	SIGNAL	CONTACT BETWEEN	CLOSED	OPEN
PROBE INTO WATER (High Water)				
	HIGH CUTOFF	7 & 8		X
		7 & 8A	X	
PROBE OUT OF WATER (Low Water)	LOW ALARM	10 & 9	X	
		10 & 9A		X

Notes:

1. Terminal point number on terminal block.
2. Field wiring by others.
3. Probe uses < 1 mA, 12 VAC trickle current to detect liquid.
4. Relay card output contacts rated 10 amps.
5. 18 AWG used for control circuit wiring.
6. Terminals: Use copper conductors only 60° C (140° F). Recommended Torque = 4.4-7.1 lb.in. Class 1 wirng only.
7. Caution: Bonding between conduit connections not automatic and must be provided as a part of the installation.
8. Relay cards provide dry contacts only.
9. Hanging probe assembly in tower cold water basin. (Probe heights are field adjustable.)
10. Recommended operating water level as marked in the tower's COLD WATER BASIN.

MARLEY ITEM #: E80312
UL FILE #: E312361
SUPPLY VOLTAGE: .. 120vAC - 60HZ
FULL LOAD AMPS: 2A
ENCLOSURE TYPE: .. 4X

CONFIDENTIAL: The contents of this document are confidential and constitute the exclusive property of SPX Cooling Technologies. This document and its contents may not be made public in any manner, distributed or loaned to others, or reproduced or copied either in whole or part without the prior written consent of SPX Cooling Technologies.
© as of date(s) in title block SPX Cooling Technologies
Unpublished–All rights reserved under copyright laws.

ECO NUMBER		MARLEY LLC WATER LEVEL CONTROLS LA + HCO				SPX. COOLING TECHNOLOGIES			
REV. BY	CHECKED								
REV. DATE		DRAWN BY	DATE	CHECKED	APPROVED	ORDER NUMBER	PLOT	DRAWING NUMBER	REV.
		DGWOOD	11/26/2008				1=5.2	08–24230	

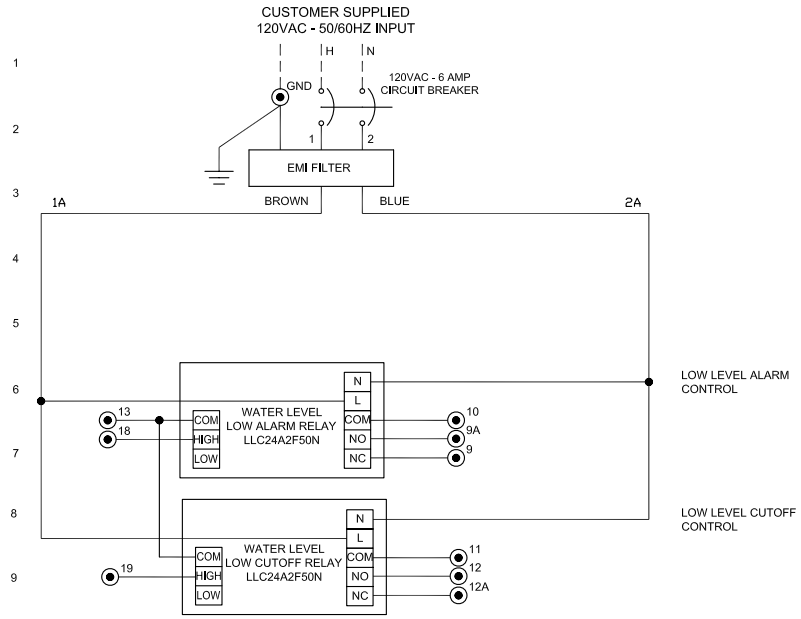

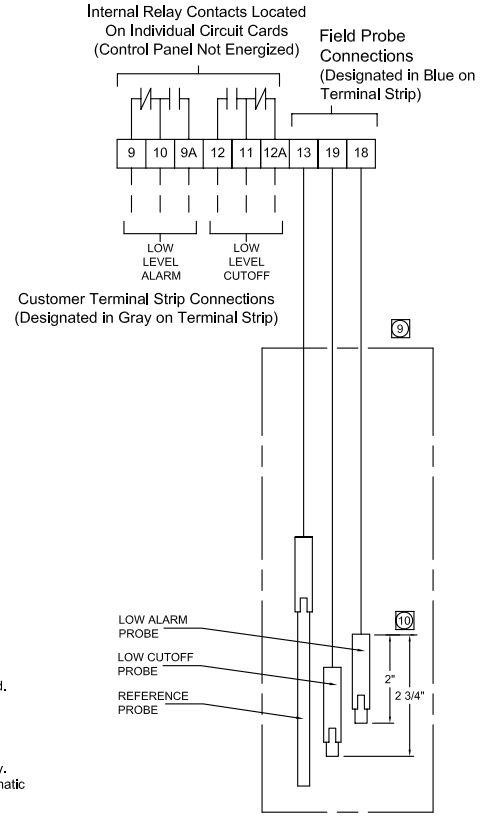

TABLE 1
OPERATION STATUS
(Power Applied)

WATER DEPTH	SIGNAL	CONTACT BETWEEN	CLOSED	OPEN
PROBE OUT OF WATER (Low Water)	LOW ALARM	10 & 9	X	
		10 & 9A		X
	LOW CUTOFF	11 & 12		X
		11 & 12A	X	

Notes:

1. ● Terminal point number on terminal block.
2. —— —— Field wiring by others.
3. Probe uses < 1 mA, 12 VAC trickle current to detect liquid.
4. Relay card output contacts rated 10 amps.
5. 18 AWG used for control circuit wiring.
6. Terminals: Use copper conductors only 60° C (140° F). Recommended Torque = 4.4-7.1 lb.in. Class 1 wirng only.
7. Caution: Bonding between conduit connections not automatic and must be provided as a part of the installation.
8. Relay cards provide dry contacts only.
9. Hanging probe assembly in tower cold water basin. (Probe heights are field adjustable.)
10. Recommended operating water level as marked in the tower's COLD WATER BASIN.

MARLEY ITEM #: E80313
UL FILE #: E312361
SUPPLY VOLTAGE: .. 120vAC - 60HZ
FULL LOAD AMPS: 2A
ENCLOSURE TYPE: .. 4X

CONFIDENTIAL: The contents of this document are confidential and constitute the exclusive property of SPX Cooling Technologies. This document and its contents may not be made public in any manner, distributed or loaned to others, or reproduced or copied either in whole or part without the prior written consent of SPX Cooling Technologies.
© as of date(s) in title block SPX Cooling Technologies
Unpublished–All rights reserved under copyright laws.

ECO NUMBER		MARLEY LLC WATER LEVEL CONTROLS LA + LCO				SPX COOLING TECHNOLOGIES			
REV. BY	CHECKED								
REV. DATE		DRAWN BY	DATE	CHECKED	APPROVED	ORDER NUMBER	PLOT	DRAWING NUMBER	REV.
		DGWOOD	11/26/2008				1=5.2	08–242231	

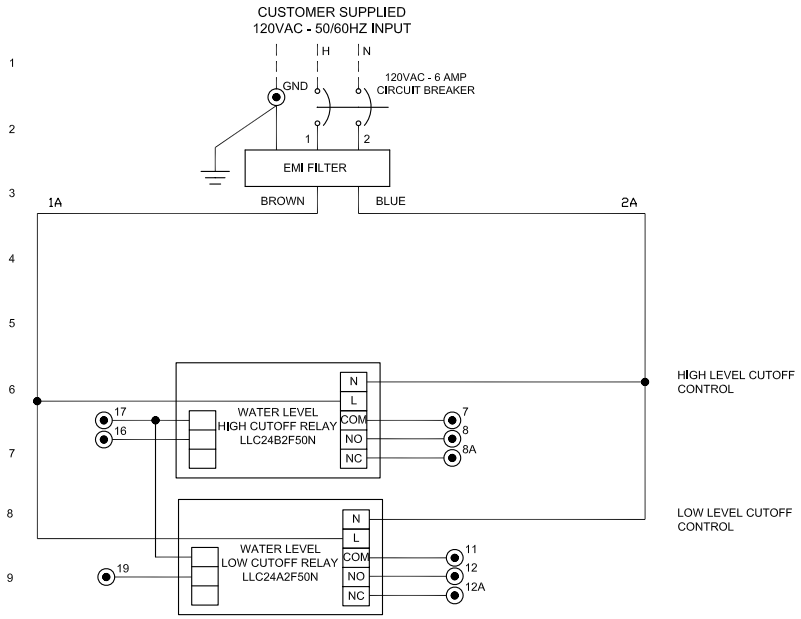

TABLE 1 OPERATION STATUS (Power Applied)				
WATER DEPTH	SIGNAL	CONTACT BETWEEN	CLOSED	OPEN
PROBE INTO WATER (High Water)	HIGH CUTOFF	7 & 8		X
		7 & 8A	X	
PROBE OUT OF WATER (Low Water)	LOW CUTOFF	11 & 12		X
		11 & 12A	X	

Notes:

1. Terminal point number on terminal block.
2. Field wiring by others.
3. Probe uses < 1 mA, 12 VAC trickle current to detect liquid.
4. Relay card output contacts rated 10 amps.
5. 18 AWG used for control circuit wiring.
6. Terminals: Use copper conductors only 60° C (140° F). Recommended Torque = 4.4-7.1 lb.in. Class 1 wirng only.
7. Caution: Bonding between conduit connections not automatic and must be provided as a part of the installation.
8. Relay cards provide dry contacts only.
9. Hanging probe assembly in tower cold water basin. (Probe heights are field adjustable.)
10. Recommended operating water level as marked in the tower's COLD WATER BASIN.

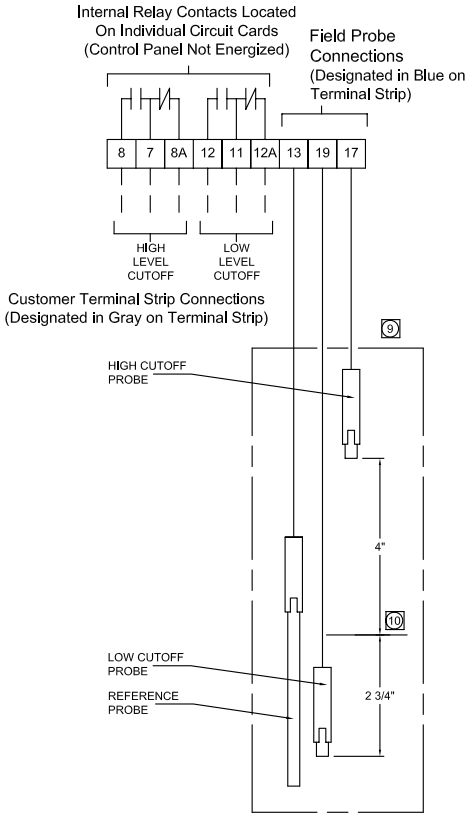

MARLEY ITEM #:	E80314
UL FILE #:	E312361
SUPPLY VOLTAGE: ..	120vAC - 60HZ
FULL LOAD AMPS:	2A
ENCLOSURE TYPE: ..	4X

CONFIDENTIAL: The contents of this document are confidential and constitute the exclusive property of SPX Cooling Technologies. This document and its contents may not be made public in any manner, distributed or loaned to others, or reproduced or copied either in whole or part without the prior written consent of SPX Cooling Technologies.
© as of date(s) in title block SPX Cooling Technologies
Unpublished–All rights reserved under copyright laws.

ECO NUMBER		MARLEY LLC WATER LEVEL CONTROLS HCO + LCO				SPX. COOLING TECHNOLOGIES			
REV. BY	CHECKED								
REV. DATE		DRAWN BY	DATE	CHECKED	APPROVED	ORDER NUMBER	PLOT	DRAWING NUMBER	REV.
		DGWOOD	11/26/2008				1=5.2	08–24232	

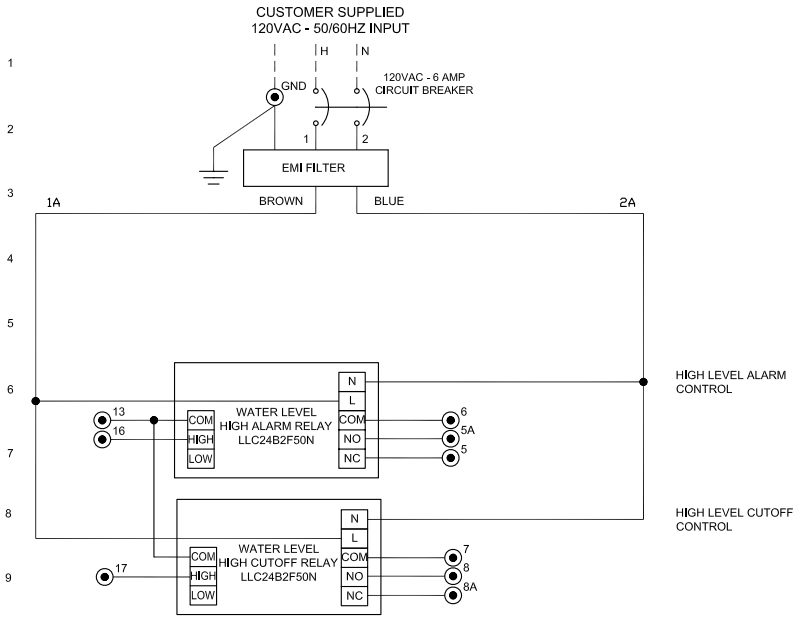

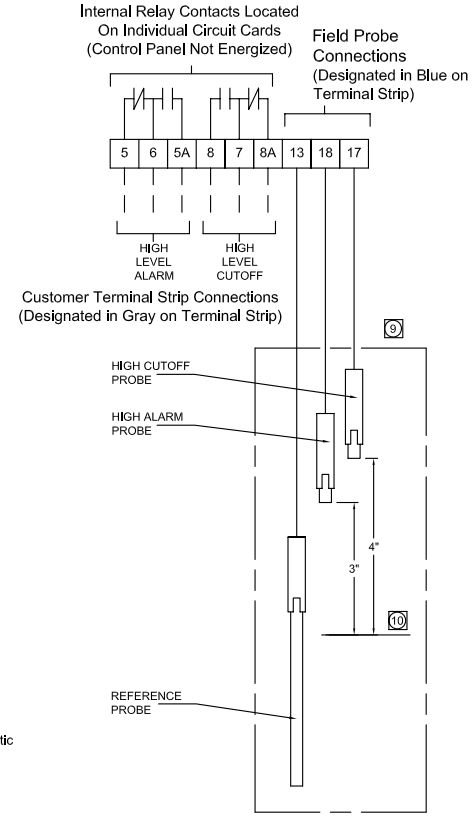

TABLE 1
OPERATION STATUS
(Power Applied)

WATER DEPTH	SIGNAL	CONTACT BETWEEN	CLOSED	OPEN
PROBE INTO WATER (High Water)	HIGH ALARM	6 & 5	X	
		6 & 5A		X
	HIGH CUTOFF	7 & 8		X
		7 & 8A	X	

Notes:

1. Terminal point number on terminal block.
2. —— —— Field wiring by others.
3. Probe uses < 1 mA, 12 VAC trickle current to detect liquid.
4. Relay card output contacts rated 10 amps.
5. 18 AWG used for control circuit wiring.
6. Terminals: Use copper conductors only 60° C (140° F). Recommended Torque = 4.4-7.1 lb.in. Class 1 wirng only.
7. Caution: Bonding between conduit connections not automatic and must be provided as a part of the installation.
8. Relay cards provide dry contacts only.
9. Hanging probe assembly in tower cold water basin. (Probe heights are field adjustable.)
10. Recommended operating water level as marked in the tower's COLD WATER BASIN.

MARLEY ITEM #: E80310
UL FILE #: E312361
SUPPLY VOLTAGE: .. 120vAC - 60HZ
FULL LOAD AMPS: 2A
ENCLOSURE TYPE: .. 4X

CONFIDENTIAL: The contents of this document are confidential and constitute the exclusive property of SPX Cooling Technologies. This document and its contents may not be made public in any manner, distributed or loaned to others, or reproduced or copied either in whole or part without the prior written consent of SPX Cooling Technologies.
© as of date(s) in title block SPX Cooling Technologies
Unpublished–All rights reserved under copyright laws.

ECO NUMBER		MARLEY LLC WATER LEVEL CONTROLS HA + HCO				SPX COOLING TECHNOLOGIES			
REV. BY	CHECKED								
REV. DATE		DRAWN BY	DATE	CHECKED	APPROVED	ORDER NUMBER	PLOT	DRAWING NUMBER	REV.
		DGWOOD	08/11/2008				1=5.2	08–24228	

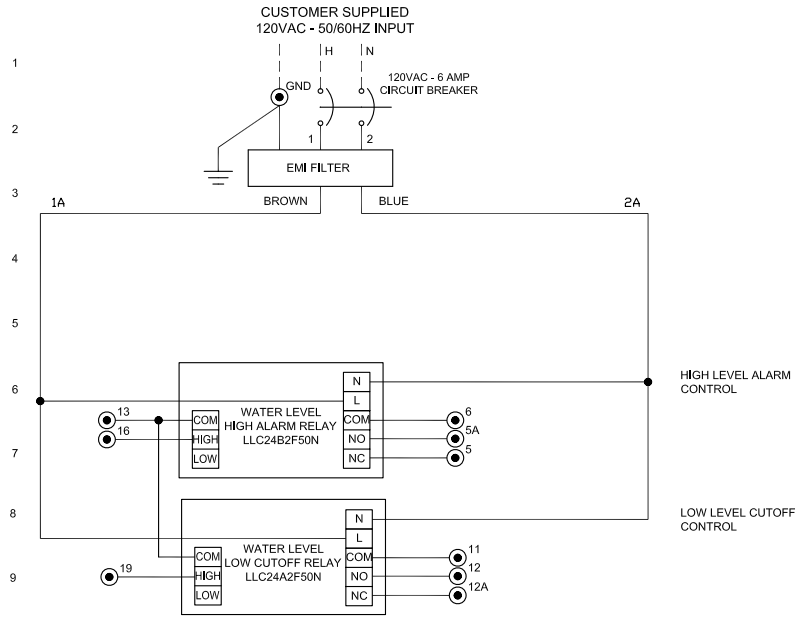

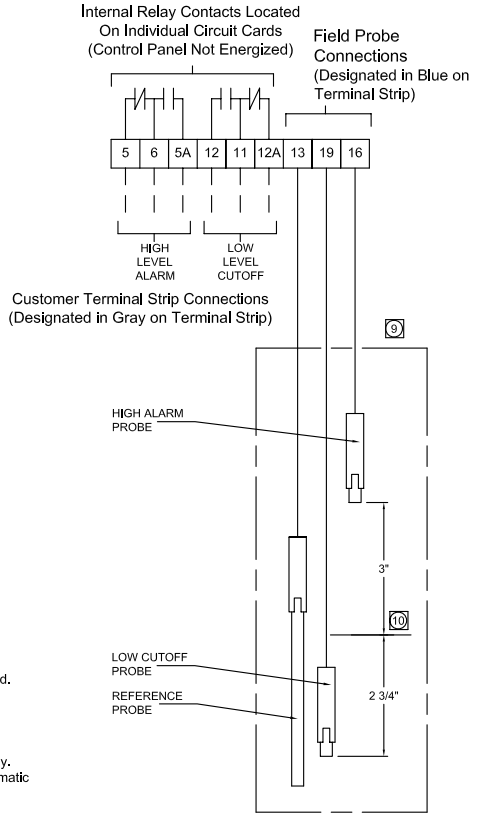

TABLE 1
OPERATION STATUS
(Power Applied)

WATER DEPTH	SIGNAL	CONTACT BETWEEN	CLOSED	OPEN
PROBE INTO WATER (High Water)	HIGH ALARM	6 & 5	X	
		6 & 5A		X
PROBE OUT OF WATER (Low Water)	LOW CUTOFF	11 & 12		X
		11 & 12A	X	

Notes:

1. Terminal point number on terminal block.
2. Field wiring by others.
3. Probe uses < 1 mA, 12 VAC trickle current to detect liquid.
4. Relay card output contacts rated 10 amps.
5. 18 AWG used for control circuit wiring.
6. Terminals: Use copper conductors only 60° C (140° F). Recommended Torque = 4.4-7.1 lb.in. Class 1 wirng only.
7. Caution: Bonding between conduit connections not automatic and must be provided as a part of the installation.
8. Relay cards provide dry contacts only.
9. Hanging probe assembly in tower cold water basin. (Probe heights are field adjustable.)
10. Recommended operating water level as marked in the tower's COLD WATER BASIN.

MARLEY ITEM #:	E80311
UL FILE #:	E312361
SUPPLY VOLTAGE: ..	120vAC - 60HZ
FULL LOAD AMPS:	2A
ENCLOSURE TYPE: ..	4X

CONFIDENTIAL: The contents of this document are confidential and constitute the exclusive property of SPX Cooling Technologies. This document and its contents may not be made public in any manner, distributed or loaned to others, or reproduced or copied either in whole or part without the prior written consent of SPX Cooling Technologies.
© as of date(s) in title block SPX Cooling Technologies
Unpublished–All rights reserved under copyright laws.

ECO NUMBER		WATER LEVEL CONTROL SYSTEM				SPX. COOLING TECHNOLOGIES			
REV. BY	CHECKED	HA + LCO							
REV. DATE		DRAWN BY	DATE	CHECKED	APPROVED	ORDER NUMBER	PLOT	DRAWING NUMBER	REV.
		DGWOOD	11/26/2008				1=5.2	08–24229	

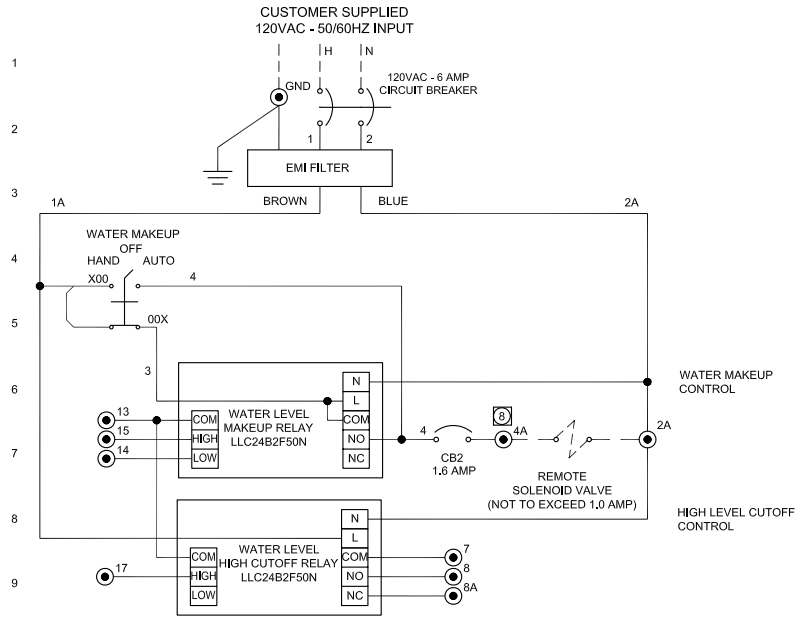

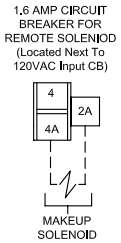

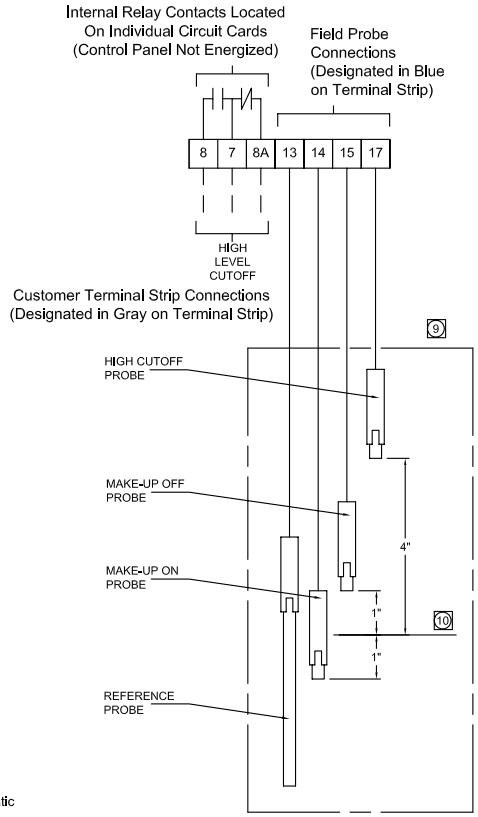

TABLE 1 OPERATION STATUS (Power Applied)				
WATER DEPTH	SIGNAL	CONTACT BETWEEN	CLOSED	OPEN
PROBE INTO WATER (High Water)	HIGH CUTOFF	7 & 8		X
		7 & 8A	X	

Notes:

1. Terminal point number on terminal block.
2. Field wiring by others.
3. Probe uses < 1 mA, 12 VAC trickle current to detect liquid.
4. Relay card output contacts rated 10 amps.
5. 18 AWG used for control circuit wiring.
6. Terminals: Use copper conductors only 60° C (140° F). Recommended Torque = 4.4-7.1 lb.in. Class 1 wirng only.
7. Caution: Bonding between conduit connections not automatic and must be provided as a part of the installation.
8. Makeup relay supplies 120VAC for solenoid valve. The other relay card provides dry contacts only.
9. Hanging probe assembly in tower cold water basin. (Probe heights are field adjustable.)
10. Recommended operating water level as marked in the tower's COLD WATER BASIN.

MARLEY ITEM #: E80307
UL FILE #: E312361
SUPPLY VOLTAGE: .. 120vAC - 60HZ
FULL LOAD AMPS: 2A
ENCLOSURE TYPE: .. 4X

CONFIDENTIAL: The contents of this document are confidential and constitute the exclusive property of SPX Cooling Technologies. This document and its contents may not be made public in any manner, distributed or loaned to others, or reproduced or copied either in whole or part without the prior written consent of SPX Cooling Technologies.
© as of date(s) in title block SPX Cooling Technologies
Unpublished–All rights reserved under copyright laws.

ECO NUMBER		MARLEY LLC WATER LEVEL CONTROLS MAKE–UP + HCO				SPX COOLING TECHNOLOGIES			
REV. BY	CHECKED								
REV. DATE		DRAWN BY	DATE	CHECKED	APPROVED	ORDER NUMBER	PLOT	DRAWING NUMBER	REV.
		DGWOOD	11/26/2008				1=5.2	08–24225	

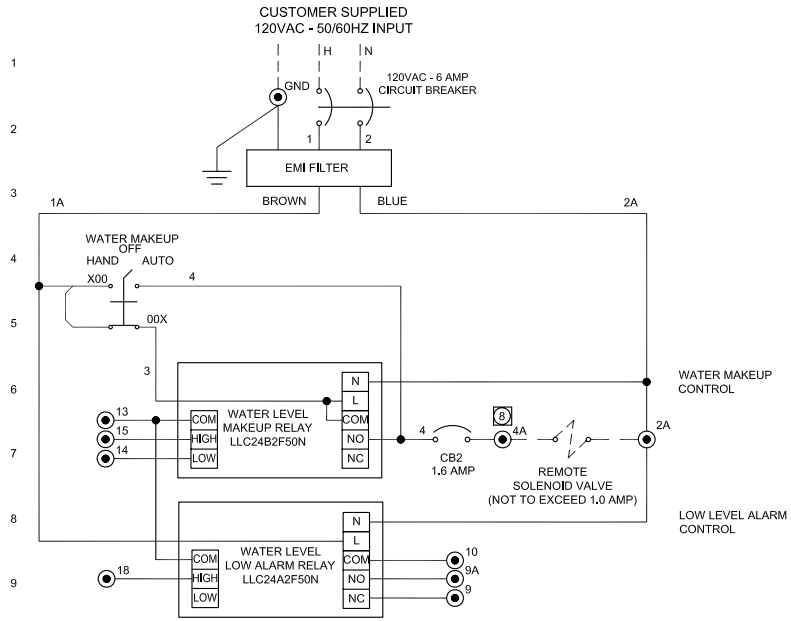

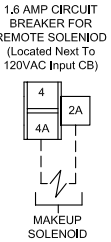

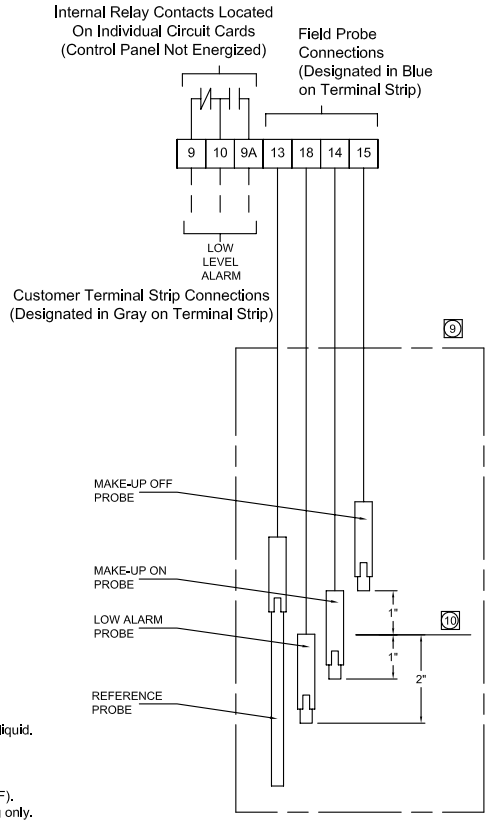

TABLE 1 OPERATION STATUS (Power Applied)				
WATER DEPTH	SIGNAL	CONTACT BETWEEN	CLOSED	OPEN
PROBE OUT OF WATER (Low Water)	LOW ALARM	10 & 9	X	
		10 & 9A		X

Notes:

1. Terminal point number on terminal block.
2. Field wiring by others.
3. Probe uses < 1 mA, 12 VAC trickle current to detect liquid.
4. Relay card output contacts rated 10 amps.
5. 18 AWG used for control circuit wiring.
6. Terminals: Use copper conductors only 60° C (140° F). Recommended Torque = 4.4-7.1 lb.in. Class 1 wirng only.
7. Caution: Bonding between conduit connections not automatic and must be provided as a part of the installation.
8. Makeup relay supplies 120VAC for solenoid valve. The other relay card provides dry contacts only.
9. Hanging probe assembly in tower cold water basin. (Probe heights are field adjustable.)
10. Recommended operating water level as marked in the tower's COLD WATER BASIN.

MARLEY ITEM #:	E80306
UL FILE #:	E312361
SUPPLY VOLTAGE: ..	120vAC - 60HZ
FULL LOAD AMPS:	2A
ENCLOSURE TYPE: ..	4X

CONFIDENTIAL: The contents of this document are confidential and constitute the exclusive property of SPX Cooling Technologies. This document and its contents may not be made public in any manner, distributed or loaned to others, or reproduced or copied either in whole or part without the prior written consent of SPX Cooling Technologies.
© as of date(s) in title block SPX Cooling Technologies
Unpublished–All rights reserved under copyright laws.

ECO NUMBER		MARLEY LLC WATER CONTROLS MAKE–UP + LA				SPX. COOLING TECHNOLOGIES			
REV. BY	CHECKED								
REV. DATE		DRAWN BY	DATE	CHECKED	APPROVED	ORDER NUMBER	PLOT	DRAWING NUMBER	REV.
		DGWOOD	11/26/2008				1=5.2	08–24224	

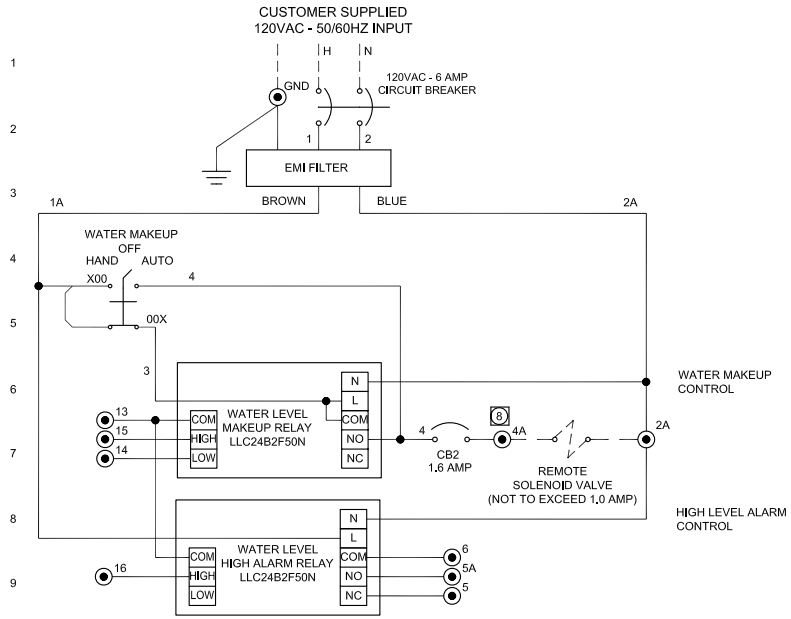

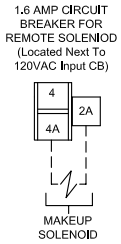

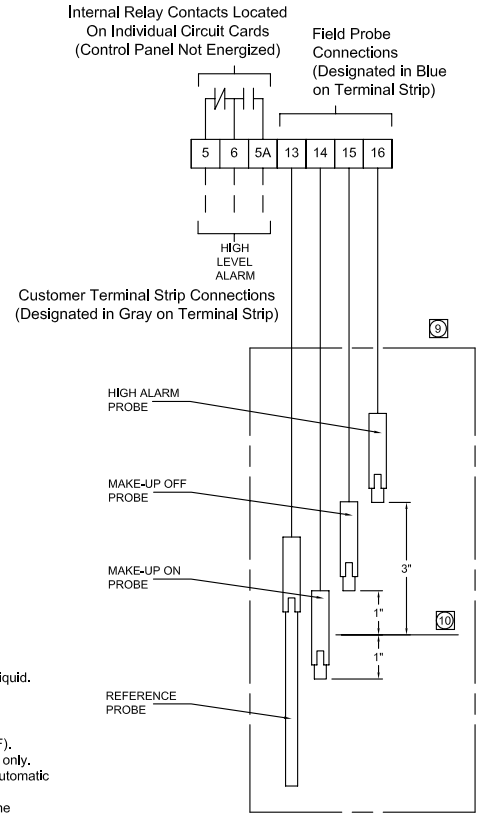

TABLE 1
OPERATION STATUS
(Power Applied)

WATER DEPTH	SIGNAL	CONTACT BETWEEN	CLOSED	OPEN
PROBE INTO WATER (High Water)	HIGH ALARM	6 & 5	X	
		6 & 5A		X

Notes:

1. Terminal point number on terminal block.
2. Field wiring by others.
3. Probe uses < 1 mA, 12 VAC trickle current to detect liquid.
4. Relay card output contacts rated 10 amps.
5. 18 AWG used for control circuit wiring.
6. Terminals: Use copper conductors only 60° C (140° F). Recommended Torque = 4.4-7.1 lb.in. Class 1 wirng only.
7. Caution: Bonding between conduit connections not automatic and must be provided as a part of the installation.
8. Makeup relay supplies 120VAC for solenoid valve. The other relay card provides dry contacts only.
9. Hanging probe assembly in tower cold water basin. (Probe heights are field adjustable.)
10. Recommended operating water level as marked in the tower's COLD WATER BASIN.

MARLEY ITEM #: E80305
UL FILE #: E312361
SUPPLY VOLTAGE: .. 120vAC - 60HZ
FULL LOAD AMPS: 2A
ENCLOSURE TYPE: .. 4X

CONFIDENTIAL: The contents of this document are confidential and constitute the exclusive property of SPX Cooling Technologies. This document and its contents may not be made public in any manner, distributed or loaned to others, or reproduced or copied either in whole or part without the prior written consent of SPX Cooling Technologies.
© as of date(s) in title block SPX Cooling Technologies
Unpublished–All rights reserved under copyright laws.

ECO NUMBER		MARLEY LLC WATER LEVEL CONTROLS MAKE–UP + HA				SPX COOLING TECHNOLOGIES			
REV. BY	CHECKED								
REV. DATE		DRAWN BY	DATE	CHECKED	APPROVED	ORDER NUMBER	PLOT	DRAWING NUMBER	REV.
		DGWOOD	11/26/2008				1=5.2	08–24223	

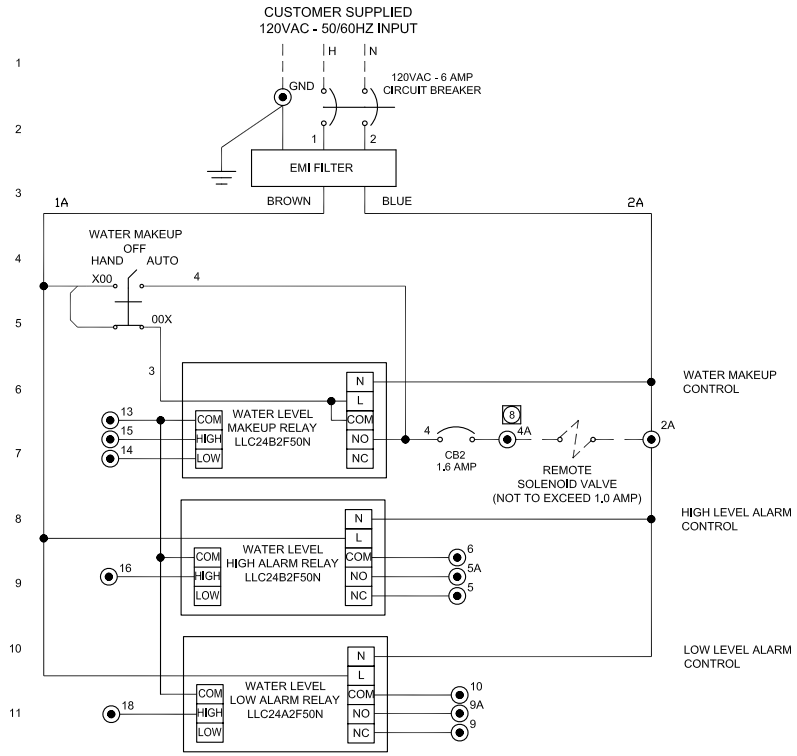

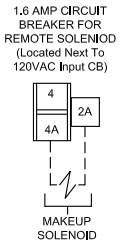

OPERATION STATUS (Panel Energized)				
WATER DEPTH	SIGNAL	CONTACT BETWEEN	CLOSED	OPEN
PROBE INTO WATER (High Water)	HIGH ALARM	6 & 5	X	
		6 & 5A		X
PROBE OUT OF WATER (Low Water)	LOW ALARM	10 & 9	X	
		10 & 9A		X

Notes:

1. ● Terminal point number on terminal block.
2. —— —— Field wiring by others.
3. Probe uses < 1 mA, 12 VAC trickle current to detect liquid.
4. Relay card output contacts rated 10 amps.
5. 18 AWG used for control circuit wiring.
6. Terminals: Use copper conductors only 60° C (140° F). Recommended Torque = 4.4-7.1 lb.in. Class 1 wirng only.
7. Caution: Bonding between conduit connections not automatic and must be provided as a part of the installation.
8. Makeup relay supplies 120VAC for solenoid valve. All other relay cards provide dry contacts only.
9. Hanging probe assembly in tower cold water basin. (Probe heights are field adjustable.)
10. Recommended operating water level as marked in the tower's COLD WATER BASIN.

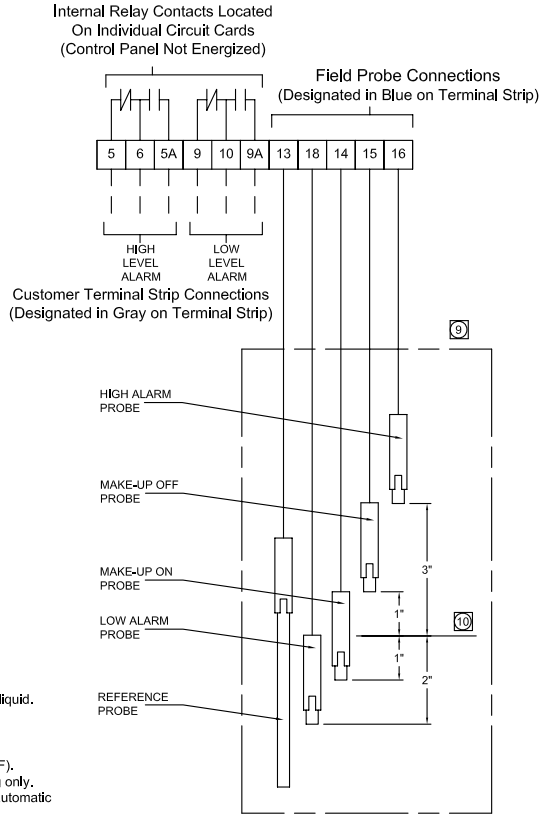

MARLEY ITEM #:	E80315
UL FILE #:	E312361
SUPPLY VOLTAGE: ..	120vAC - 60HZ
FULL LOAD AMPS:	2A
ENCLOSURE TYPE: ..	4X

CONFIDENTIAL: The contents of this document are confidential and constitute the exclusive property of SPX Cooling Technologies. This document and its contents may not be made public in any manner, distributed or loaned to others, or reproduced or copied either in whole or part without the prior written consent of SPX Cooling Technologies.
© as of date(s) in title block SPX Cooling Technologies
Unpublished-All rights reserved under copyright laws.

ECO NUMBER		MARLEY LLC WATER LEVEL CONTROLS MAKE-UP + HA + LA				SPX. COOLING TECHNOLOGIES			
REV. BY	CHECKED								
REV. DATE		DRAWN BY	DATE	CHECKED	APPROVED	ORDER NUMBER	PLOT	DRAWING NUMBER	REV.
		DGWOOD	11/3/2008				1=5.2	08-24233	

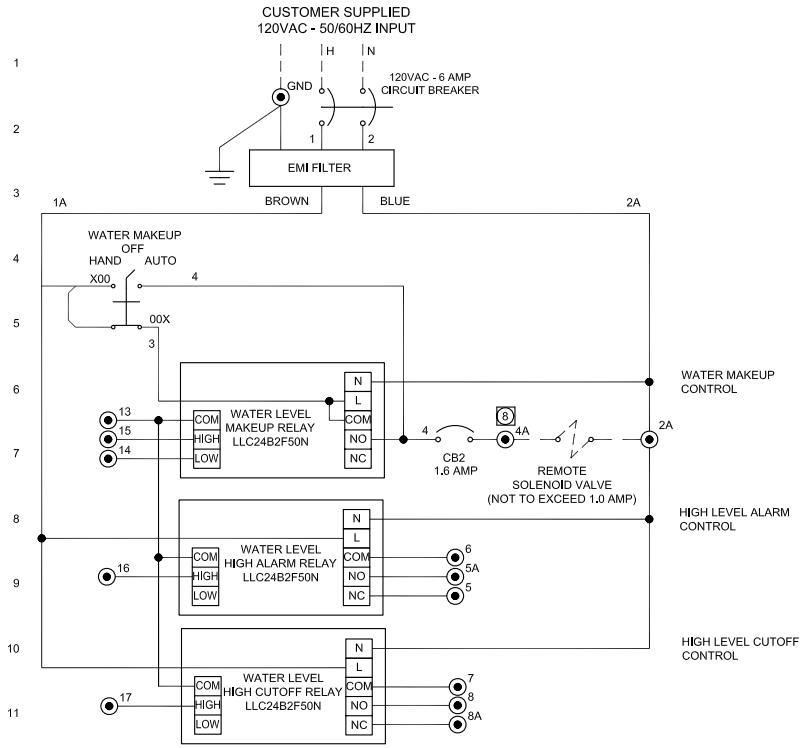

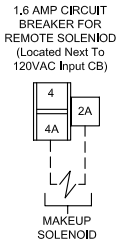

TABLE 1
OPERATION STATUS
(Power Applied)

WATER DEPTH	SIGNAL	CONTACT BETWEEN	CLOSED	OPEN
PROBE INTO WATER (High Water)	HIGH ALARM	6 & 5	X	
		6 & 5A		X
	HIGH CUTOFF	7 & 8		X
		7 & 8A	X	

Notes:

1. Terminal point number on terminal block.
2. Field wiring by others.
3. Probe uses < 1 mA, 12 VAC trickle current to detect liquid.
4. Relay card output contacts rated 10 amps.
5. 18 AWG used for control circuit wiring.
6. Terminals: Use copper conductors only 60° C (140° F). Recommended Torque = 4.4-7.1 lb.in. Class 1 wirng only.
7. Caution: Bonding between conduit connections not automatic and must be provided as a part of the installation.
8. Makeup relay supplies 120VAC for solenoid valve. All other relay cards provide dry contacts only.
9. Hanging probe assembly in tower cold water basin. (Probe heights are field adjustable.)
10. Recommended operating water level as marked in the tower's COLD WATER BASIN.

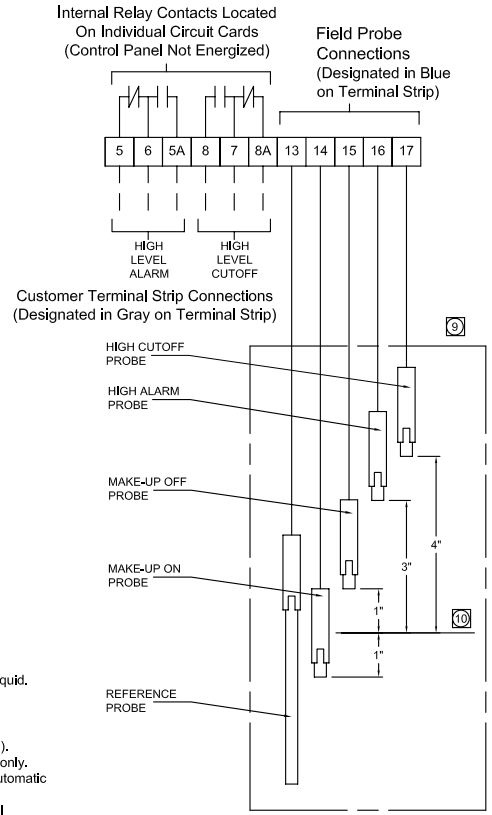

MARLEY ITEM #: E80316
UL FILE #: E312361
SUPPLY VOLTAGE: .. 120vAC - 60HZ
FULL LOAD AMPS: 2A
ENCLOSURE TYPE: .. 4X

CONFIDENTIAL: The contents of this document are confidential and constitute the exclusive property of SPX Cooling Technologies. This document and its contents may not be made public in any manner, distributed or loaned to others, or reproduced or copied either in whole or part without the prior written consent of SPX Cooling Technologies.
© as of date(s) in title block SPX Cooling Technologies
Unpublished–All rights reserved under copyright laws.

ECO NUMBER		MARLEY LLC WATER LEVEL CONTROLS MAKE–UP + HA + HCO				SPX. COOLING TECHNOLOGIES			
REV. BY	CHECKED								
REV. DATE		DRAWN BY	DATE	CHECKED	APPROVED	ORDER NUMBER	PLOT	DRAWING NUMBER	REV.
		DGWOOD	11/26/2008				1=5.2	08–24234	

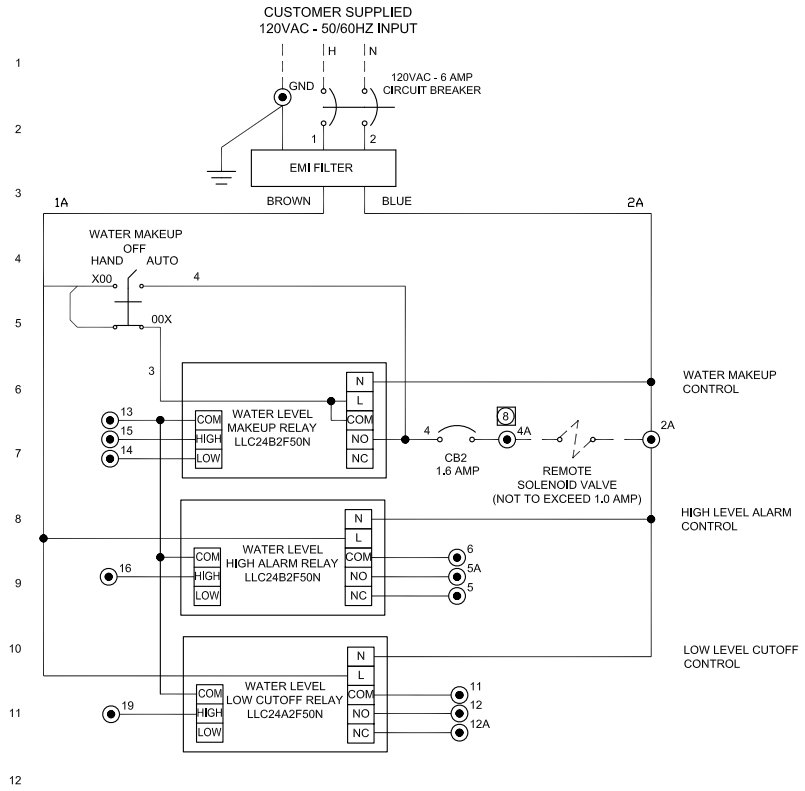

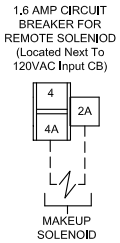

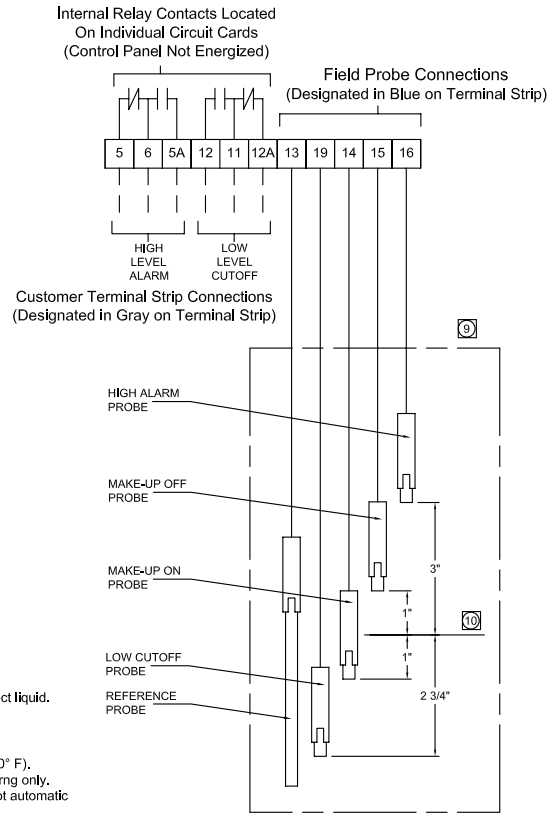

TABLE 1
OPERATION STATUS
(Power Applied)

WATER DEPTH	SIGNAL	CONTACT BETWEEN	CLOSED	OPEN
PROBE INTO WATER (High Water)	HIGH ALARM	6 & 5	X	
		6 & 5A		X
PROBE OUT OF WATER (Low Water)	LOW CUTOFF	11 & 12		X
		11 & 12A	X	

Notes:

1. Terminal point number on terminal block.
2. Field wiring by others.
3. Probe uses < 1 mA, 12 VAC trickle current to detect liquid.
4. Relay card output contacts rated 10 amps.
5. 18 AWG used for control circuit wiring.
6. Terminals: Use copper conductors only 60° C (140° F). Recommended Torque = 4.4-7.1 lb.in. Class 1 wirng only.
7. Caution: Bonding between conduit connections not automatic and must be provided as a part of the installation.
8. Makeup relay supplies 120VAC for solenoid valve. All other relay cards provide dry contacts only.
9. Hanging probe assembly in tower cold water basin. (Probe heights are field adjustable.)
10. Recommended operating water level as marked in the tower's COLD WATER BASIN.

MARLEY ITEM #: E80317
UL FILE #: E312361
SUPPLY VOLTAGE: .. 120vAC - 60HZ
FULL LOAD AMPS: 2A
ENCLOSURE TYPE: .. 4X

CONFIDENTIAL: The contents of this document are confidential and constitute the exclusive property of SPX Cooling Technologies. This document and its contents may not be made public in any manner, distributed or loaned to others, or reproduced or copied either in whole or part without the prior written consent of SPX Cooling Technologies.
© as of date(s) in title block SPX Cooling Technologies Unpublished–All rights reserved under copyright laws.

ECO NUMBER		MARLEY LLC WATER LEVEL CONTROLS MAKE–UP + HA + LCO				SPX. COOLING TECHNOLOGIES			
REV. BY	CHECKED								
REV. DATE		DRAWN BY	DATE	CHECKED	APPROVED	ORDER NUMBER	PLOT	DRAWING NUMBER	REV.
		DGWOOD	11/26/2008				1=5.2	08–24235	

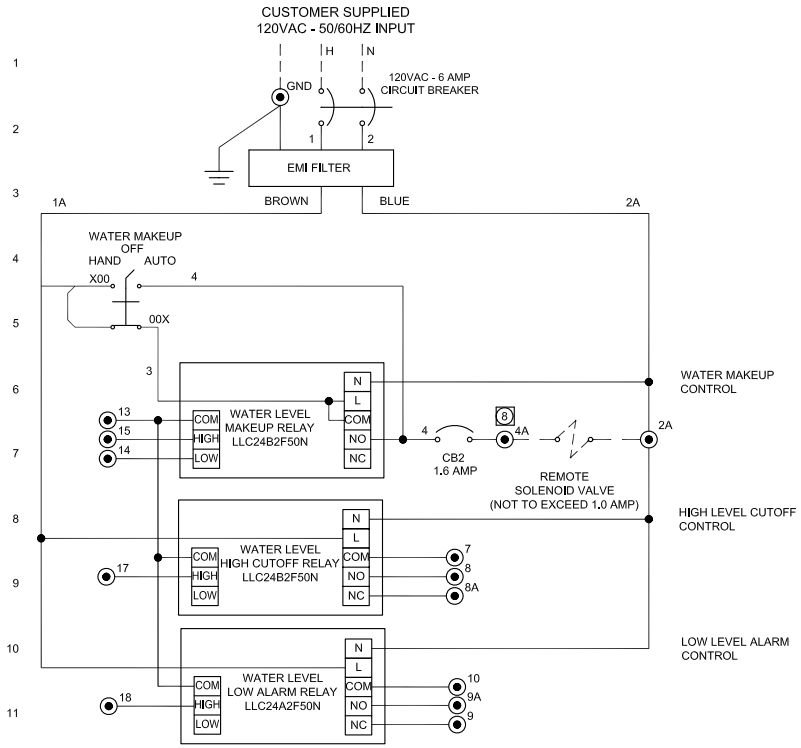

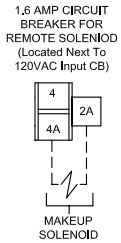

TABLE 1
OPERATION STATUS
(Power Applied)

WATER DEPTH	SIGNAL	CONTACT BETWEEN	CLOSED	OPEN
PROBE INTO WATER (High Water)				
	HIGH CUTOFF	7 & 8		X
		7 & 8A	X	
PROBE OUT OF WATER (Low Water)	LOW ALARM	10 & 9	X	
		10 & 9A		X

Notes:

1. ◉ Terminal point number on terminal block.
2. —— —— Field wiring by others.
3. Probe uses < 1 mA, 12 VAC trickle current to detect liquid.
4. Relay card output contacts rated 10 amps.
5. 18 AWG used for control circuit wiring.
6. Terminals: Use copper conductors only 60° C (140° F). Recommended Torque = 4.4-7.1 lb.In. Class 1 wlrng only.
7. Caution: Bonding between conduit connections not automatic and must be provided as a part of the installation.
8. Makeup relay supplies 120VAC for solenoid valve. All other relay cards provide dry contacts only.
9. Hanging probe assembly in tower cold water basin. (Probe heights are field adjustable.)
10. Recommended operating water level as marked in the tower's COLD WATER BASIN.

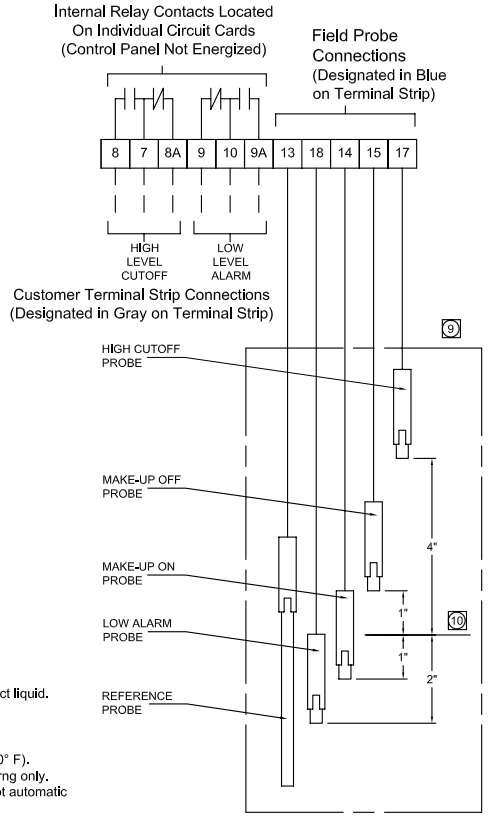

MARLEY ITEM #:	E80318
UL FILE #:	E312361
SUPPLY VOLTAGE: ..	120vAC - 60HZ
FULL LOAD AMPS:	2A
ENCLOSURE TYPE: ..	4X

CONFIDENTIAL: The contents of this document are confidential and constitute the exclusive property of SPX Cooling Technologies. This document and its contents may not be made public in any manner, distributed or loaned to others, or reproduced or copied either in whole or part without the prior written consent of SPX Cooling Technologies.
© as of date(s) in title block SPX Cooling Technologies
Unpublished–All rights reserved under copyright laws.

ECO NUMBER		MARLEY LLC WATER LEVEL CONTROLS MAKE–UP LA + HCO				SPX. COOLING TECHNOLOGIES			
REV. BY	CHECKED								
REV. DATE		DRAWN BY	DATE	CHECKED	APPROVED	ORDER NUMBER	PLOT	DRAWING NUMBER	REV.
		DGWOOD	11/26/2008				1=5.2	08–24236	

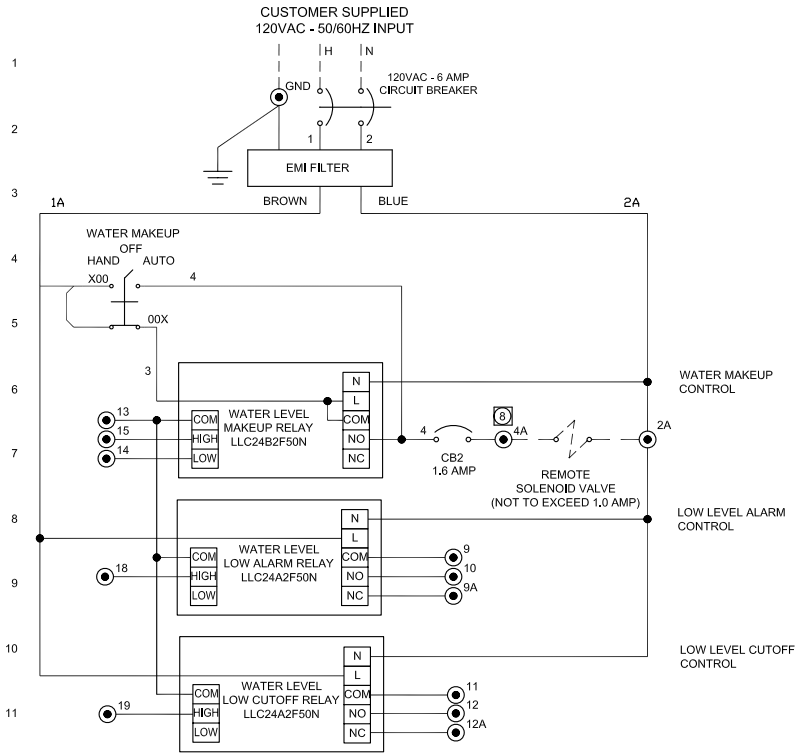

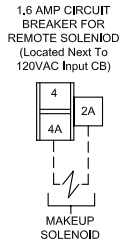

TABLE 1 OPERATION STATUS (Power Applied)				
WATER DEPTH	SIGNAL	CONTACT BETWEEN	CLOSED	OPEN
PROBE OUT OF WATER (Low Water)	LOW ALARM	10 & 9	X	
		10 & 9A		X
	LOW CUTOFF	11 & 12		X
		11 & 12A	X	

Notes:

1. Terminal point number on terminal block.
2. Field wiring by others.
3. Probe uses < 1 mA, 12 VAC trickle current to detect liquid.
4. Relay card output contacts rated 10 amps.
5. 18 AWG used for control circuit wiring.
6. Terminals: Use copper conductors only 60° C (140° F). Recommended Torque = 4.4-7.1 lb.in. Class 1 wirng only.
7. Caution: Bonding between conduit connections not automatic and must be provided as a part of the installation.
8. Makeup relay supplies 120VAC for solenoid valve. All other relay cards provide dry contacts only.
9. Hanging probe assembly in tower cold water basin. (Probe heights are field adjustable.)
10. Recommended operating water level as marked in the tower's COLD WATER BASIN.

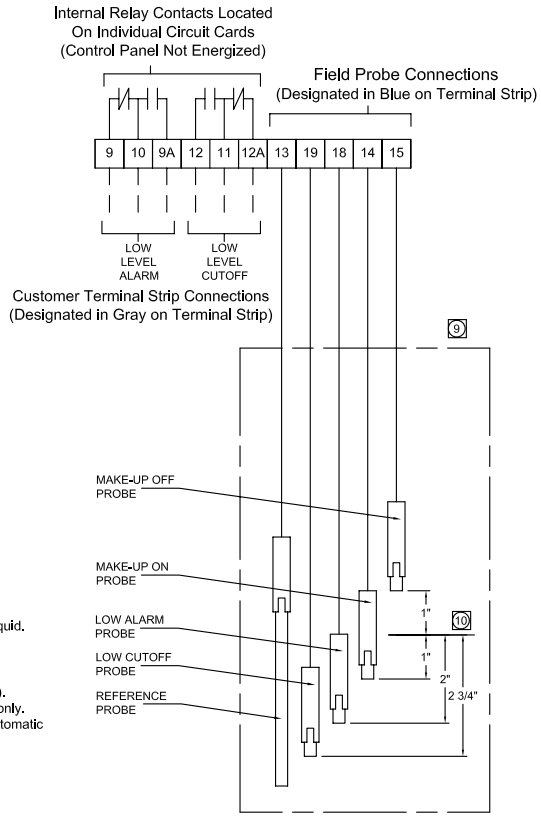

MARLEY ITEM #: E80319
UL FILE #: E312361
SUPPLY VOLTAGE: .. 120vAC - 60HZ
FULL LOAD AMPS: 2A
ENCLOSURE TYPE: .. 4X

CONFIDENTIAL: The contents of this document are confidential and constitute the exclusive property of SPX Cooling Technologies. This document and its contents may not be made public in any manner, distributed or loaned to others, or reproduced or copied either in whole or part without the prior written consent of SPX Cooling Technologies.
© as of date(s) in title block SPX Cooling Technologies
Unpublished–All rights reserved under copyright laws.

ECO NUMBER		MARLEY LLC WATER LEVEL CONTROLS MAKE–UP + LA + LCO				SPX COOLING TECHNOLOGIES			
REV. BY	CHECKED								
REV. DATE		DRAWN BY	DATE	CHECKED	APPROVED	ORDER NUMBER	PLOT	DRAWING NUMBER	REV.
		DGWOOD	11/25/2008				1=5.2	08–24237	

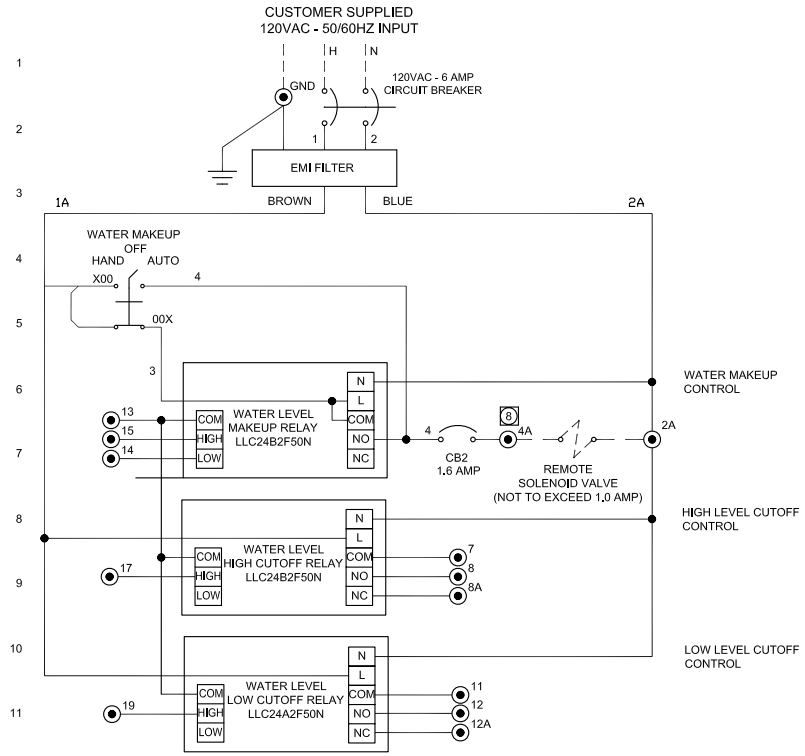

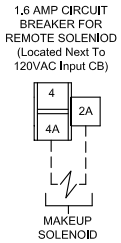

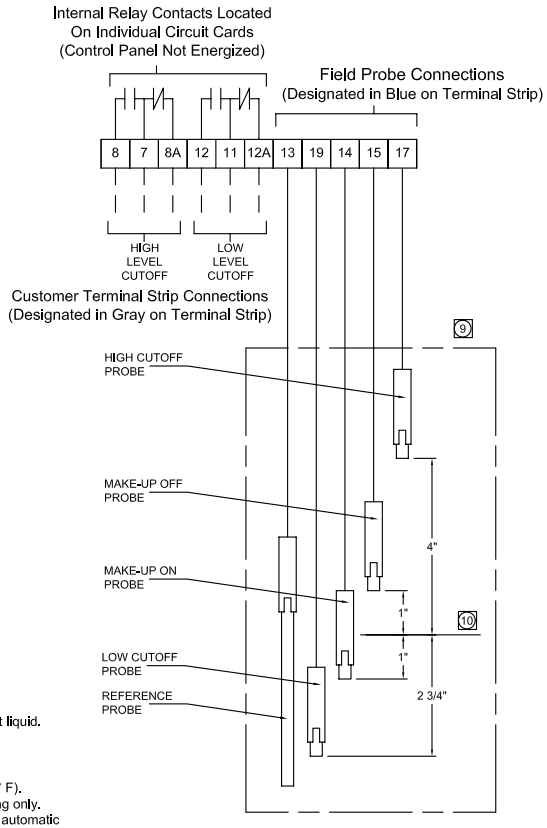

TABLE 1
OPERATION STATUS
(Power Applied)

WATER DEPTH	SIGNAL	CONTACT BETWEEN	CLOSED	OPEN
PROBE INTO WATER (High Water)	HIGH ALARM	6 & 5	X	
		6 & 5A		X
PROBE OUT OF WATER (Low Water)	LOW CUTOFF	11 & 12		X
		11 & 12A	X	

Notes:

1. Terminal point number on terminal block.
2. Field wiring by others.
3. Probe uses < 1 mA, 12 VAC trickle current to detect liquid.
4. Relay card output contacts rated 10 amps.
5. 18 AWG used for control circuit wiring.
6. Terminals: Use copper conductors only 60° C (140° F). Recommended Torque = 4.4-7.1 lb.In. Class 1 wirng only.
7. Caution: Bonding between conduit connections not automatic and must be provided as a part of the installation.
8. Makeup relay supplies 120VAC for solenoid valve. All other relay cards provide dry contacts only.
9. Hanging probe assembly in tower cold water basin. (Probe heights are field adjustable.)
10. Recommended operating water level as marked in the tower's COLD WATER BASIN.

MARLEY ITEM #: E80320
UL FILE #: E312361
SUPPLY VOLTAGE: .. 120vAC - 60HZ
FULL LOAD AMPS: 2A
ENCLOSURE TYPE: .. 4X

CONFIDENTIAL: The contents of this document are confidential and constitute the exclusive property of SPX Cooling Technologies. This document and its contents may not be made public in any manner, distributed or loaned to others, or reproduced or copied either in whole or part without the prior written consent of SPX Cooling Technologies.
© as of date(s) in title block SPX Cooling Technologies
Unpublished–All rights reserved under copyright laws.

ECO NUMBER		MARLEY LLC WATER LEVEL CONTROLS MAKE–UP + HCO + LCO				SPX COOLING TECHNOLOGIES			
REV. BY	CHECKED								
REV. DATE		DRAWN BY	DATE	CHECKED	APPROVED	ORDER NUMBER	PLOT	DRAWING NUMBER	REV.
		DGWOOD	11/26/2008				1=5.2	08–24238	

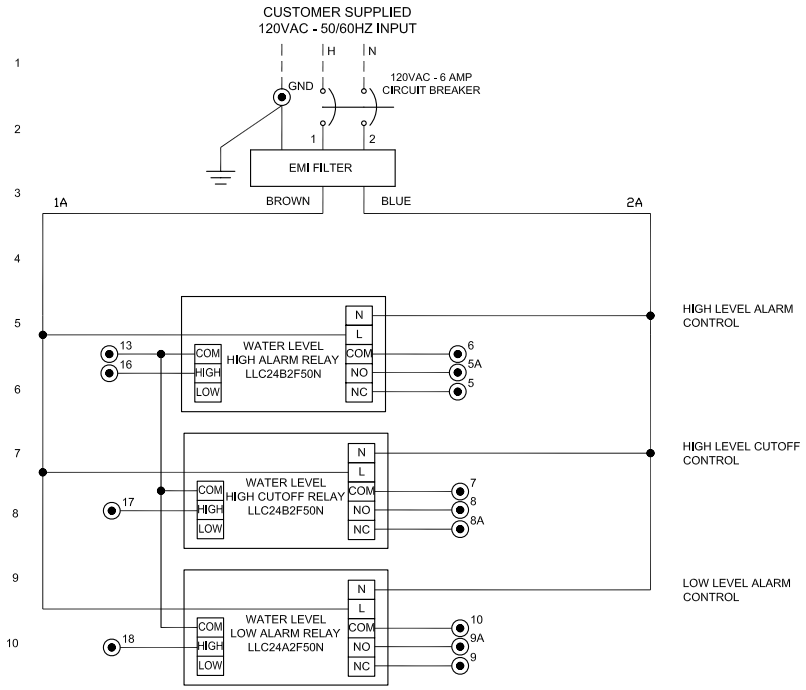

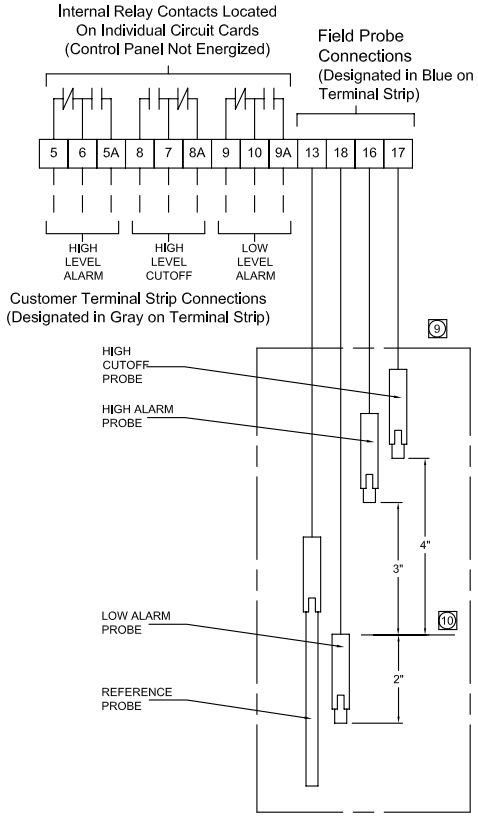

TABLE 1
OPERATION STATUS
(Power Applied)

WATER DEPTH	SIGNAL	CONTACT BETWEEN	CLOSED	OPEN
PROBE INTO WATER (High Water)	HIGH ALARM	6 & 5	X	
		6 & 5A		X
	HIGH CUTOFF	7 & 8		X
		7 & 8A	X	
PROBE OUT OF WATER (Low Water)	LOW ALARM	10 & 9	X	
		10 & 9A		X

Notes:

1. ● Terminal point number on terminal block.
2. —— —— Field wiring by others.
3. Probe uses < 1 mA, 12 VAC trickle current to detect liquid.
4. Relay card output contacts rated 10 amps.
5. 18 AWG used for control circuit wiring.
6. Terminals: Use copper conductors only 60° C (140° F). Recommended Torque = 4.4-7.1 lb.in. Class 1 wirng only.
7. Caution: Bonding between conduit connections not automatic and must be provided as a part of the installation.
8. Relay cards provide dry contacts only.
9. Hanging probe assembly in tower cold water basin. (Probe heights are field adjustable.)
10. Recommended operating water level as marked in the tower's COLD WATER BASIN.

MARLEY ITEM #: E80321
UL FILE #: E312361
SUPPLY VOLTAGE: .. 120vAC - 60HZ
FULL LOAD AMPS: 2A
ENCLOSURE TYPE: .. 4X

CONFIDENTIAL: The contents of this document are confidential and constitute the exclusive property of SPX Cooling Technologies. This document and its contents may not be made public in any manner, distributed or loaned to others, or reproduced or copied either in whole or part without the prior written consent of SPX Cooling Technologies.
© as of date(s) in title block SPX Cooling Technologies
Unpublished–All rights reserved under copyright laws.

ECO NUMBER		MARLEY LLC WATER LEVEL CONTROLS HA + LA + HCO				SPX COOLING TECHNOLOGIES			
REV. BY	CHECKED								
REV. DATE		DRAWN BY	DATE	CHECKED	APPROVED	ORDER NUMBER	PLOT	DRAWING NUMBER	REV.
		DGWOOD	11/26/2008				1=5.2	08–24239	

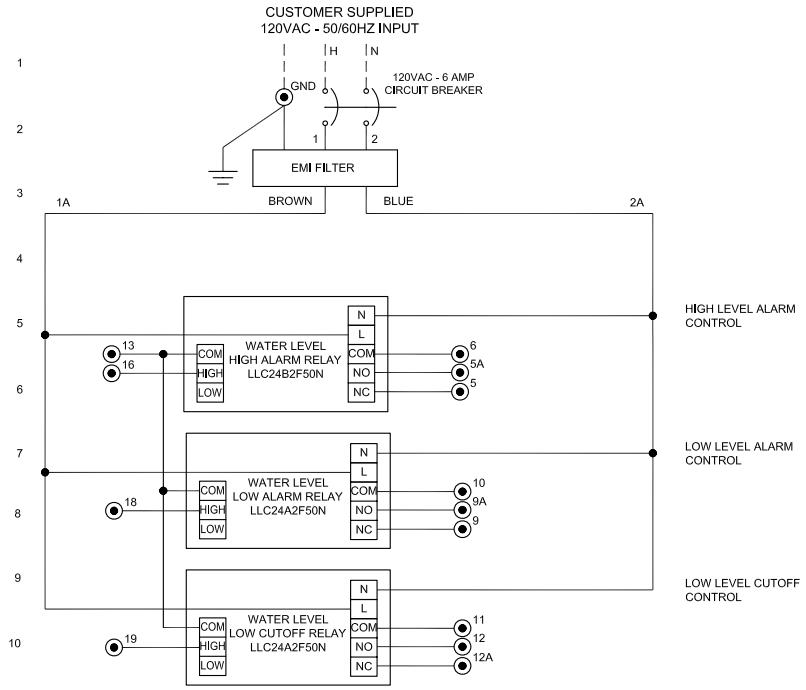

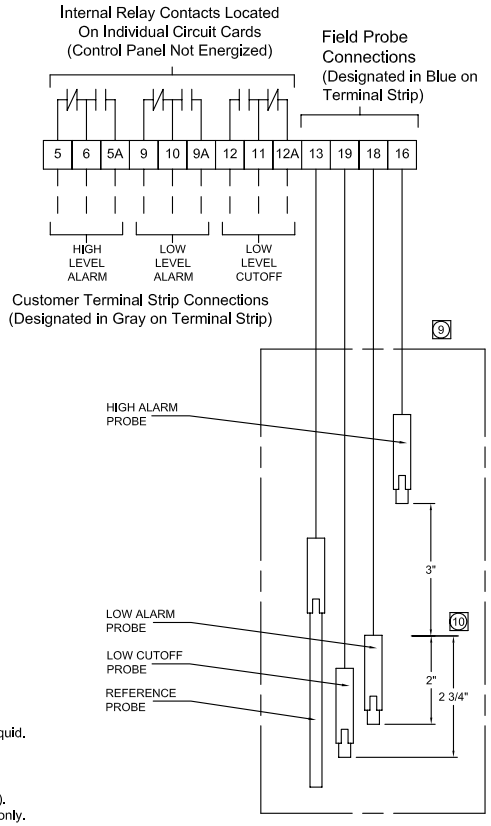

TABLE 1
OPERATION STATUS
(Power Applied)

WATER DEPTH	SIGNAL	CONTACT BETWEEN	CLOSED	OPEN
PROBE INTO WATER (High Water)	HIGH ALARM	6 & 5	X	
		6 & 5A		X
PROBE OUT OF WATER (Low Water)	LOW ALARM	10 & 9	X	
		10 & 9A		X
	LOW CUTOFF	11 & 12		X
		11 & 12A	X	

Notes:

1. ● Terminal point number on terminal block.
2. —— —— Field wiring by others.
3. Probe uses < 1 mA, 12 VAC trickle current to detect liquid.
4. Relay card output contacts rated 10 amps.
5. 18 AWG used for control circuit wiring.
6. Terminals: Use copper conductors only 60° C (140° F). Recommended Torque = 4.4-7.1 lb.in. Class 1 wiring only.
7. Caution: Bonding between conduit connections not automatic and must be provided as a part of the installation.
8. Relay cards provide dry contacts only.
9. Hanging probe assembly in tower cold water basin. (Probe heights are field adjustable.)
10. Recommended operating water level as marked in the tower's COLD WATER BASIN.

MARLEY ITEM #: E80322
UL FILE #: E312361
SUPPLY VOLTAGE: .. 120vAC - 60HZ
FULL LOAD AMPS: 2A
ENCLOSURE TYPE: .. 4X

CONFIDENTIAL: The contents of this document are confidential and constitute the exclusive property of SPX Cooling Technologies. This document and its contents may not be made public in any manner, distributed or loaned to others, or reproduced or copied either in whole or part without the prior written consent of SPX Cooling Technologies.
© as of date(s) in title block SPX Cooling Technologies
Unpublished–All rights reserved under copyright laws.

ECO NUMBER		MARLEY LLC WATER LEVEL CONTROLS HA + LA + LCO				SPX COOLING TECHNOLOGIES			
REV. BY	CHECKED								
REV. DATE		DRAWN BY	DATE	CHECKED	APPROVED	ORDER NUMBER	PLOT	DRAWING NUMBER	REV.
		DGWOOD	11/26/2008				1=5.2	08–24240	

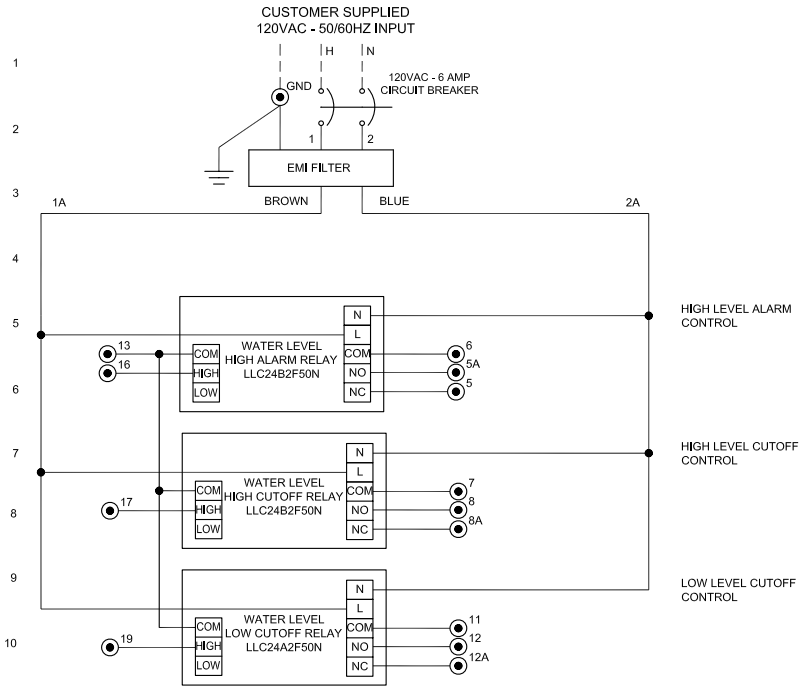

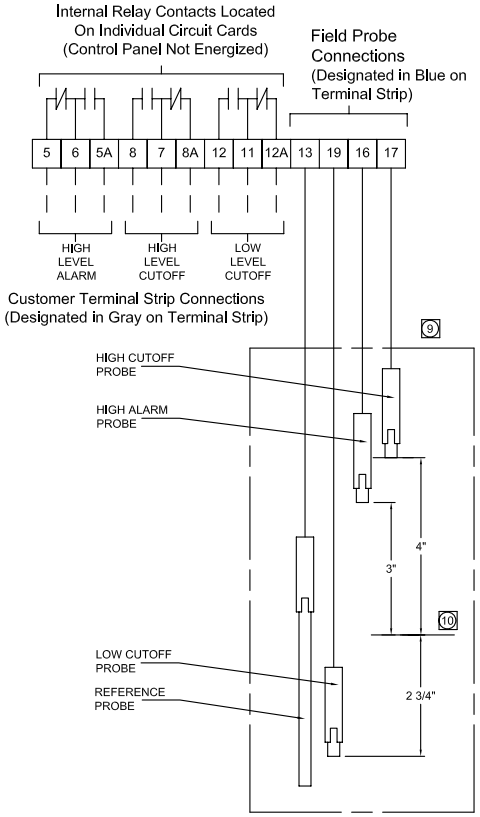

TABLE 1
OPERATION STATUS
(Power Applied)

WATER DEPTH	SIGNAL	CONTACT BETWEEN	CLOSED	OPEN
PROBE INTO WATER (High Water)	HIGH ALARM	6 & 5	X	
		6 & 5A		X
	HIGH CUTOFF	7 & 8		X
		7 & 8A	X	
PROBE OUT OF WATER (Low Water)				
	LOW CUTOFF	11 & 12		X
		11 & 12A	X	

Notes:

1. Terminal point number on terminal block.
2. Field wiring by others.
3. Probe uses < 1 mA, 12 VAC trickle current to detect liquid.
4. Relay card output contacts rated 10 amps.
5. 18 AWG used for control circuit wiring.
6. Terminals: Use copper conductors only 60° C (140° F). Recommended Torque = 4.4-7.1 lb.in. Class 1 wirng only.
7. Caution: Bonding between conduit connections not automatic and must be provided as a part of the installation.
8. Relay cards provide dry contacts only.
9. Hanging probe assembly in tower cold water basin. (Probe heights are field adjustable.)
10. Recommended operating water level as marked in the tower's COLD WATER BASIN.

MARLEY ITEM #: E80323
UL FILE #: E312361
SUPPLY VOLTAGE: .. 120vAC - 60HZ
FULL LOAD AMPS: 2A
ENCLOSURE TYPE: .. 4X

CONFIDENTIAL: The contents of this document are confidential and constitute the exclusive property of SPX Cooling Technologies. This document and its contents may not be made public in any manner, distributed or loaned to others, or reproduced or copied either in whole or part without the prior written consent of SPX Cooling Technologies.
© as of date(s) in title block SPX Cooling Technologies
Unpublished–All rights reserved under copyright laws.

ECO NUMBER		MARLEY LLC WATER LEVEL CONTROLS HA + HCO + LCO				SPX COOLING TECHNOLOGIES			
REV. BY	CHECKED								
REV. DATE		DRAWN BY	DATE	CHECKED	APPROVED	ORDER NUMBER	PLOT	DRAWING NUMBER	REV.
		DGWOOD	11/26/2008				1=5.2	08–24241	

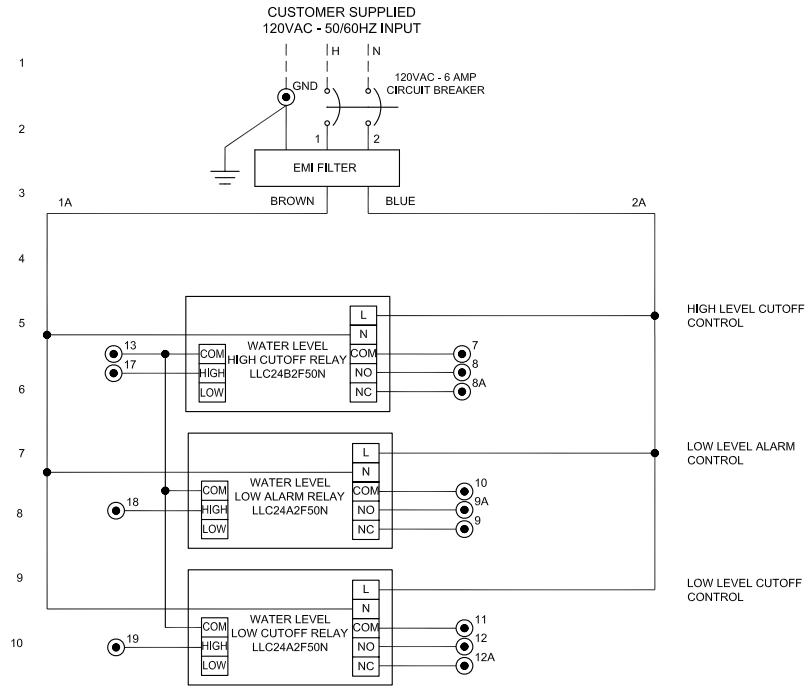

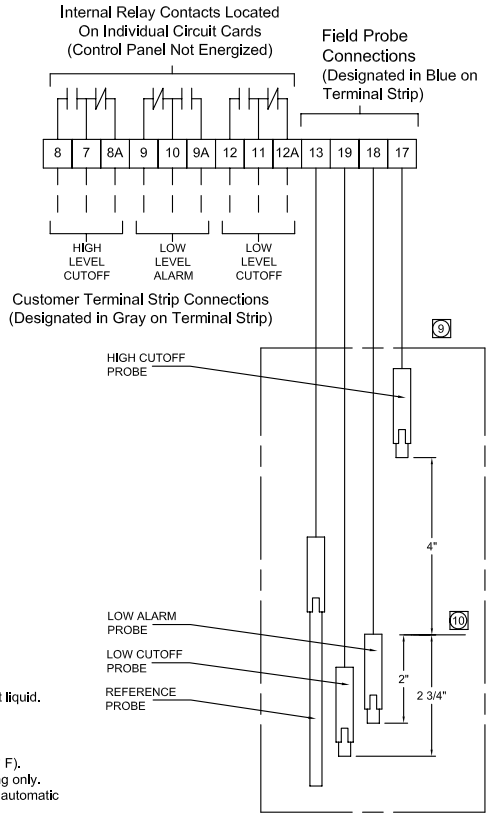

TABLE 1
OPERATION STATUS
(Power Applied)

WATER DEPTH	SIGNAL	CONTACT BETWEEN	CLOSED	OPEN
PROBE INTO WATER (High Water)	HIGH CUTOFF	7 & 8		X
		7 & 8A	X	
PROBE OUT OF WATER (Low Water)	LOW ALARM	10 & 9	X	
		10 & 9A		X
	LOW CUTOFF	11 & 12		X
		11 & 12A	X	

Notes:

1. Terminal point number on terminal block.
2. Field wiring by others.
3. Probe uses < 1 mA, 12 VAC trickle current to detect liquid.
4. Relay card output contacts rated 10 amps.
5. 18 AWG used for control circuit wiring.
6. Terminals: Use copper conductors only 60° C (140° F). Recommended Torque = 4.4-7.1 lb.in. Class 1 wirng only.
7. Caution: Bonding between conduit connections not automatic and must be provided as a part of the installation.
8. Relay cards provide dry contacts only.
9. Hanging probe assembly in tower cold water basin. (Probe heights are field adjustable.)
10. Recommended operating water level as marked in the tower's COLD WATER BASIN.

MARLEY ITEM #: E80324
UL FILE #: E312361
SUPPLY VOLTAGE: .. 120vAC - 60HZ
FULL LOAD AMPS: 2A
ENCLOSURE TYPE: .. 4X

CONFIDENTIAL: The contents of this document are confidential and constitute the exclusive property of SPX Cooling Technologies. This document and its contents may not be made public in any manner, distributed or loaned to others, or reproduced or copied either in whole or part without the prior written consent of SPX Cooling Technologies.
© as of date(s) in title block SPX Cooling Technologies
Unpublished–All rights reserved under copyright laws.

ECO NUMBER		MARLEY LLC WATERE LEVEL CONTROLS LA + HCO + LCO				SPX. COOLING TECHNOLOGIES			
REV. BY	CHECKED								
REV. DATE		DRAWN BY	DATE	CHECKED	APPROVED	ORDER NUMBER	PLOT	DRAWING NUMBER	REV.
		DGWOOD	11/26/2008				1=5.2	08–24242	

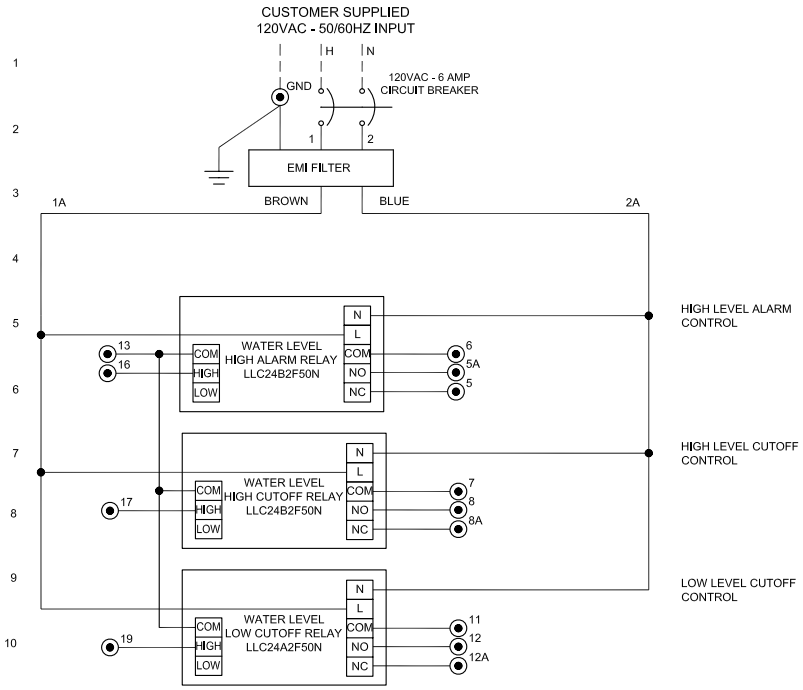

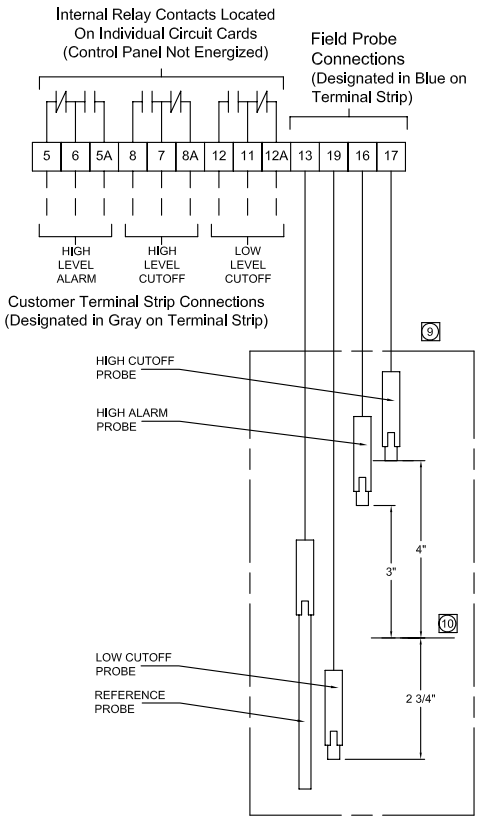

TABLE 1
OPERATION STATUS
(Power Applied)

WATER DEPTH	SIGNAL	CONTACT BETWEEN	CLOSED	OPEN
PROBE INTO WATER (High Water)	HIGH ALARM	6 & 5	X	
		6 & 5A		X
	HIGH CUTOFF	7 & 8		X
		7 & 8A	X	
PROBE OUT OF WATER (Low Water)	LOW CUTOFF	11 & 12		X
		11 & 12A	X	

Notes:

1. ◉ Terminal point number on terminal block.
2. —— —— Field wiring by others.
3. Probe uses < 1 mA, 12 VAC trickle current to detect liquid.
4. Relay card output contacts rated 10 amps.
5. 18 AWG used for control circuit wiring.
6. Terminals: Use copper conductors only 60° C (140° F). Recommended Torque = 4.4-7.1 lb.in. Class 1 wirng only.
7. Caution: Bonding between conduit connections not automatic and must be provided as a part of the installation.
8. Relay cards provide dry contacts only.
9. Hanging probe assembly in tower cold water basin. (Probe heights are field adjustable.)
10. Recommended operating water level as marked in the tower's COLD WATER BASIN.

MARLEY ITEM #: E80323
UL FILE #: E312361
SUPPLY VOLTAGE: .. 120vAC - 60HZ
FULL LOAD AMPS: 2A
ENCLOSURE TYPE: .. 4X

CONFIDENTIAL: The contents of this document are confidential and constitute the exclusive property of SPX Cooling Technologies. This document and its contents may not be made public in any manner, distributed or loaned to others, or reproduced or copied either in whole or part without the prior written consent of SPX Cooling Technologies.
© as of date(s) in title block SPX Cooling Technologies
Unpublished–All rights reserved under copyright laws.

ECO NUMBER		MARLEY LLC WATER LEVEL CONTROLS HA + HCO + LCO				SPX. COOLING TECHNOLOGIES			
REV. BY	CHECKED								
REV. DATE		DRAWN BY	DATE	CHECKED	APPROVED	ORDER NUMBER	PLOT	DRAWING NUMBER	REV.
		DGWOOD	11/26/2008				1=5.2	08–24241	

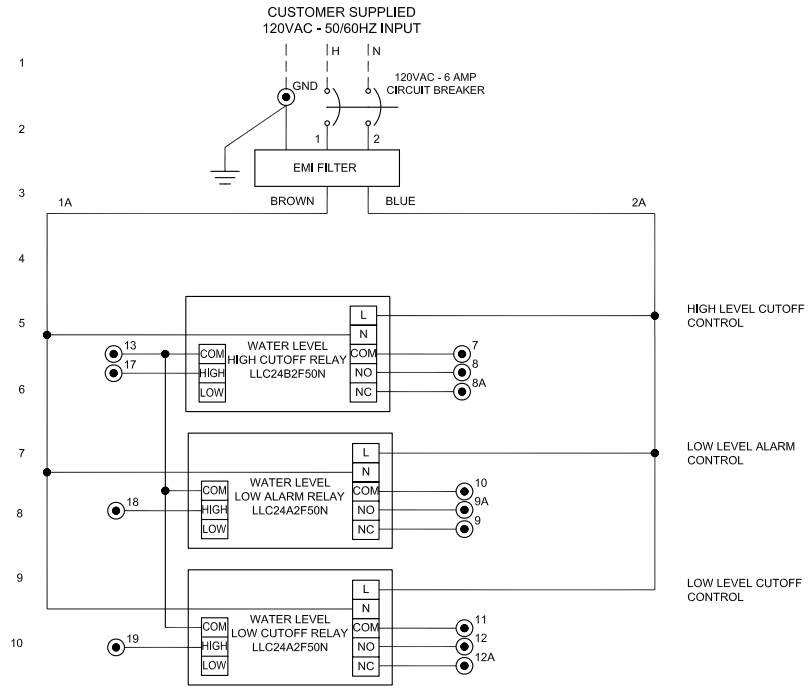

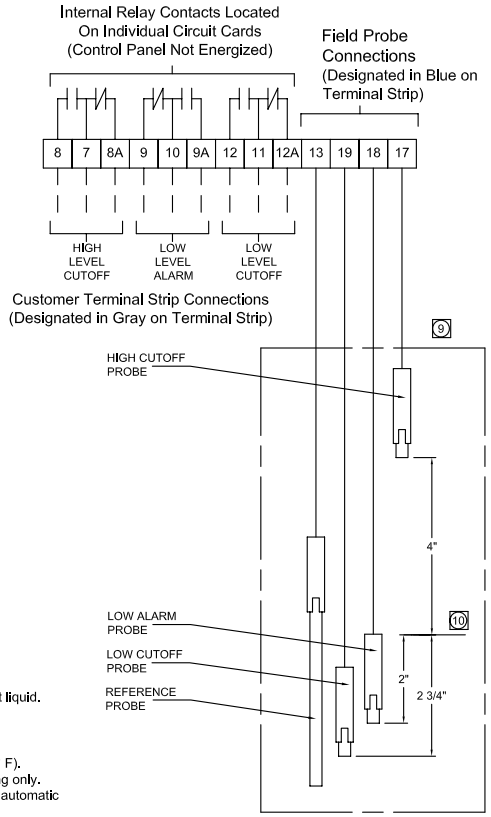

TABLE 1
OPERATION STATUS
(Power Applied)

WATER DEPTH	SIGNAL	CONTACT BETWEEN	CLOSED	OPEN
PROBE INTO WATER (High Water)	HIGH CUTOFF	7 & 8		X
		7 & 8A	X	
PROBE OUT OF WATER (Low Water)	LOW ALARM	10 & 9	X	
		10 & 9A		X
	LOW CUTOFF	11 & 12		X
		11 & 12A	X	

Notes:

1. ● Terminal point number on terminal block.
2. —— —— Field wiring by others.
3. Probe uses < 1 mA, 12 VAC trickle current to detect liquid.
4. Relay card output contacts rated 10 amps.
5. 18 AWG used for control circuit wiring.
6. Terminals: Use copper conductors only 60° C (140° F). Recommended Torque = 4.4-7.1 lb.in. Class 1 wirng only.
7. Caution: Bonding between conduit connections not automatic and must be provided as a part of the installation.
8. Relay cards provide dry contacts only.
9. Hanging probe assembly in tower cold water basin. (Probe heights are field adjustable.)
10. Recommended operating water level as marked in the tower's COLD WATER BASIN.

MARLEY ITEM #:	E80324
UL FILE #:	E312361
SUPPLY VOLTAGE: ..	120vAC - 60HZ
FULL LOAD AMPS:	2A
ENCLOSURE TYPE: ..	4X

CONFIDENTIAL: The contents of this document are confidential and constitute the exclusive property of SPX Cooling Technologies. This document and its contents may not be made public in any manner, distributed or loaned to others, or reproduced or copied either in whole or part without the prior written consent of SPX Cooling Technologies.
© as of date(s) in title block SPX Cooling Technologies
Unpublished–All rights reserved under copyright laws.

ECO NUMBER		MARLEY LLC WATERE LEVEL CONTROLS LA + HCO + LCO				SPX COOLING TECHNOLOGIES			
REV. BY	CHECKED								
REV. DATE		DRAWN BY	DATE	CHECKED	APPROVED	ORDER NUMBER	PLOT	DRAWING NUMBER	REV.
		DGWOOD	11/26/2008				1=5.2	08–24242	

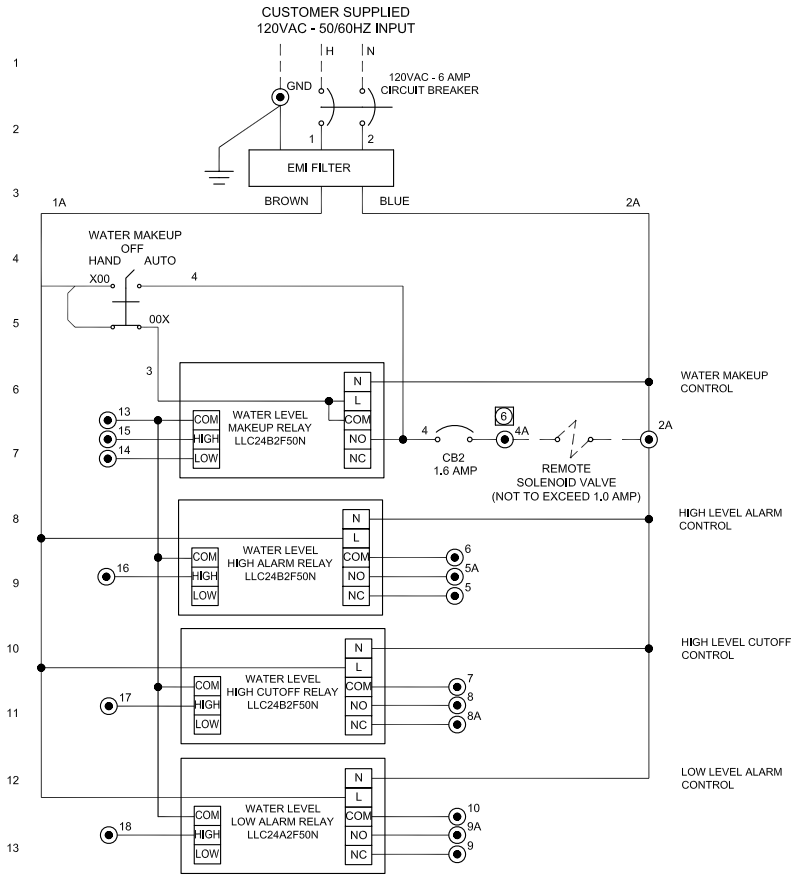

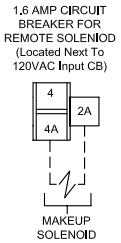

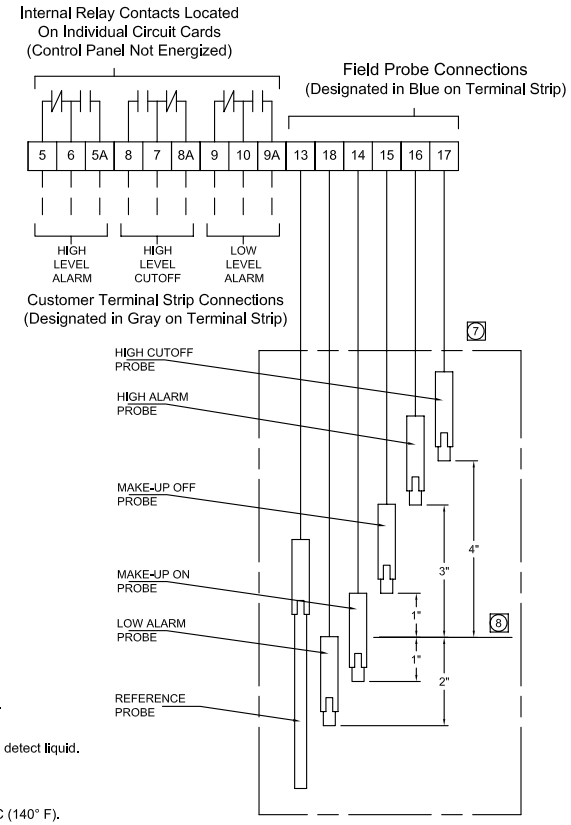

TABLE 1
OPERATION STATUS
(Power Applied)

WATER DEPTH	SIGNAL	CONTACT BETWEEN	CLOSED	OPEN
PROBE INTO WATER (High Water)	HIGH ALARM	6 & 5	X	
		6 & 5A		X
	HIGH CUTOFF	7 & 8		X
		7 & 8A	X	
PROBE OUT OF WATER (Low Water)	LOW ALARM	10 & 9	X	
		10 & 9A		X

Notes:

1. Terminal point number on terminal block.
2. —— —— Field wiring by others.
3. Probe uses < 1 mA, 12 VAC trickle current to detect liquid.
4. Relay card output contacts rated 10 amps.
5. 18 AWG used for control circuit wiring.
6. Terminals: Use copper conductors only 60° C (140° F). Recommended Torque = 4.4-7.1 lb.in. Class 1 wirng only.
7. Caution: Bonding between conduit connections not automatic and must be provided as a part of the installation.
8. Makeup relay supplies 120VAC for solenoid valve. All other relay cards provide dry contacts only.
9. Hanging probe assembly in tower cold water basin. (Probe heights are field adjustable.)
10. Recommended operating water level as marked in the tower's COLD WATER BASIN.

MARLEY ITEM #: E80325
UL FILE #: E312361
SUPPLY VOLTAGE: .. 120vAC - 60HZ
FULL LOAD AMPS: 2A
ENCLOSURE TYPE: .. 4X

CONFIDENTIAL: The contents of this document are confidential and constitute the exclusive property of SPX Cooling Technologies. This document and its contents may not be made public in any manner, distributed or loaned to others, or reproduced or copied either in whole or part without the prior written consent of SPX Cooling Technologies.
© as of date(s) in title block SPX Cooling Technologies
Unpublished–All rights reserved under copyright laws.

ECO NUMBER		MARLEY LLC WATER LEVEL CONTROLS				SPX. COOLING TECHNOLOGIES		
REV. BY	CHECKED	MAKE–UP + HA + LA + HCO						
REV. DATE		DRAWN BY	DATE	CHECKED	APPROVED	ORDER NUMBER	PLOT	DRAWING NUMBER	REV.
		DGWOOD	08/11/2008				1=5.2	08–24243	

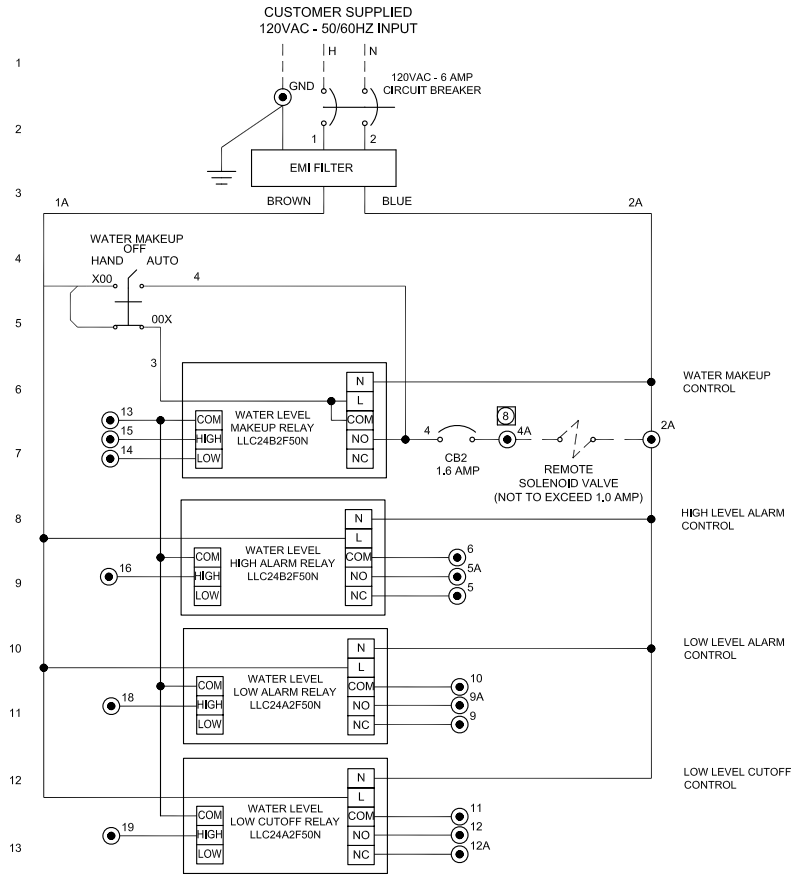

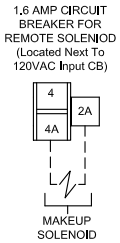

TABLE 1
OPERATION STATUS
(Power Applied)

WATER DEPTH	SIGNAL	CONTACT BETWEEN	CLOSED	OPEN
PROBE INTO WATER (High Water)	HIGH ALARM	6 & 5	X	
		6 & 5A		X
PROBE OUT OF WATER (Low Water)	LOW ALARM	10 & 9	X	
		10 & 9A		X
	LOW CUTOFF	11 & 12		X
		11 & 12A	X	

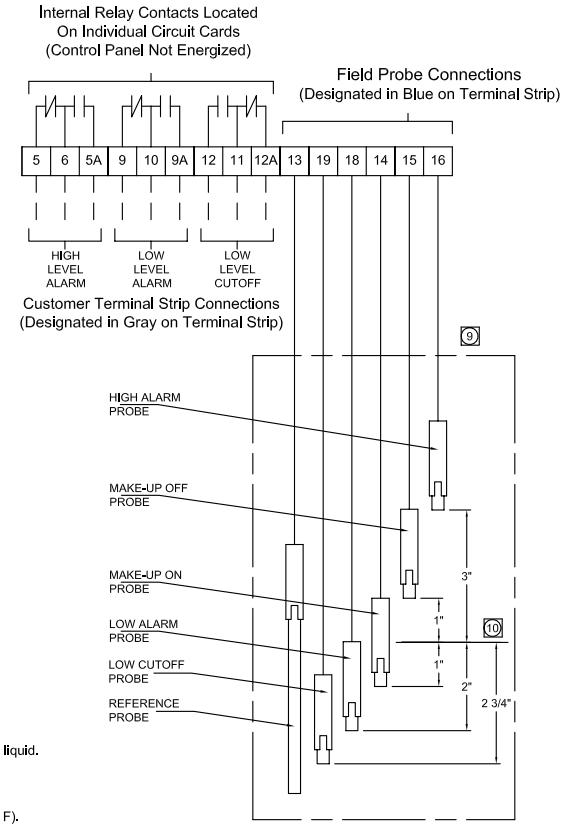

Notes:

1. Terminal point number on terminal block.
2. Field wiring by others.
3. Probe uses < 1 mA, 12 VAC trickle current to detect liquid.
4. Relay card output contacts rated 10 amps.
5. 18 AWG used for control circuit wiring.
6. Terminals: Use copper conductors only 60° C (140° F). Recommended Torque = 4.4-7.1 lb.in. Class 1 wirng only.
7. Caution: Bonding between conduit connections not automatic and must be provided as a part of the installation.
8. Makeup relay supplies 120VAC for solenoid valve. All other relay cards provide dry contacts only.
9. Hanging probe assembly in tower cold water basin. (Probe heights are field adjustable.)
10. Recommended operating water level as marked in the tower's COLD WATER BASIN.

MARLEY ITEM #: E80326
UL FILE #: E312361
SUPPLY VOLTAGE: .. 120vAC - 60HZ
FULL LOAD AMPS: 2A
ENCLOSURE TYPE: .. 4X

CONFIDENTIAL: The contents of this document are confidential and constitute the exclusive property of SPX Cooling Technologies. This document and its contents may not be made public in any manner, distributed or loaned to others, or reproduced or copied either in whole or part without the prior written consent of SPX Cooling Technologies.
© as of date(s) in title block SPX Cooling Technologies
Unpublished–All rights reserved under copyright laws.

ECO NUMBER		MARLEY LLC WATER LEVEL CONTROLS MAKE–UP + HA + LA + LCO				SPX. COOLING TECHNOLOGIES			
REV. BY	CHECKED								
REV. DATE		DRAWN BY	DATE	CHECKED	APPROVED	ORDER NUMBER	PLOT	DRAWING NUMBER	REV.
		DGWOOD	11/18/2008				1=5.2	08–24244	

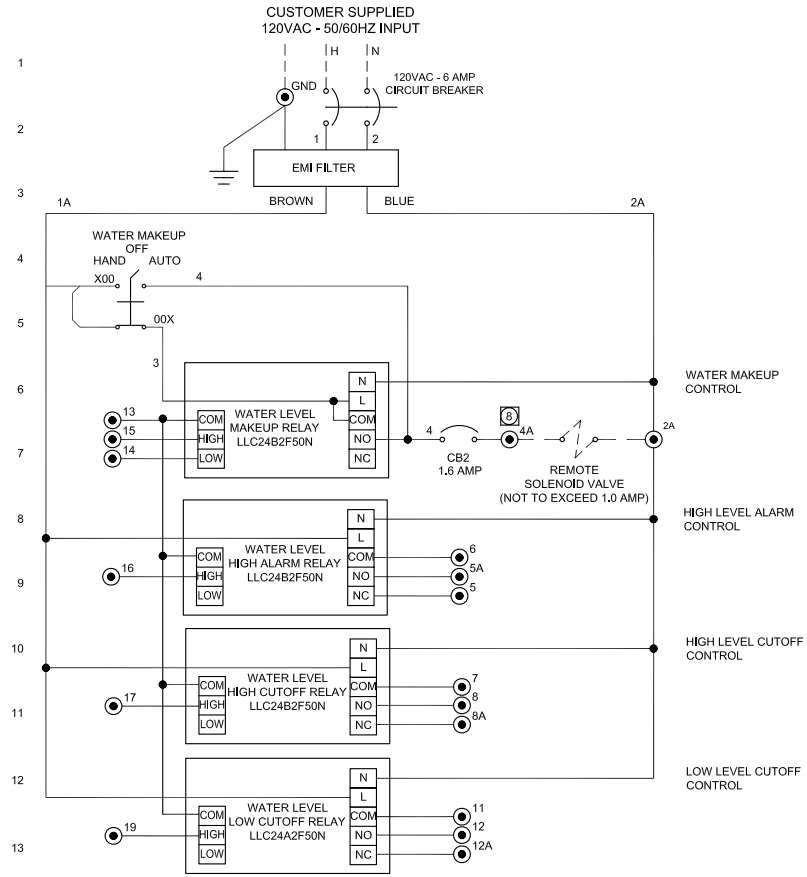

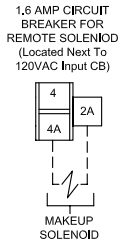

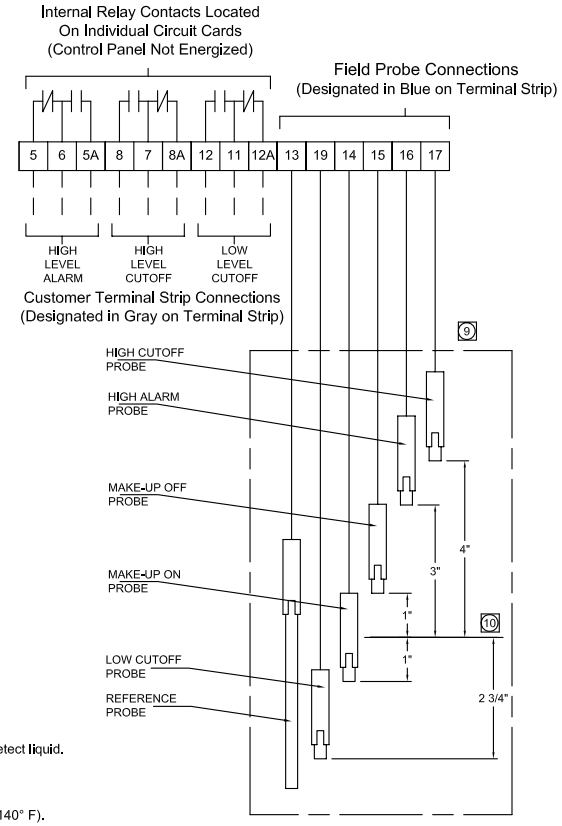

TABLE 1
OPERATION STATUS
(Power Applied)

WATER DEPTH	SIGNAL	CONTACT BETWEEN	CLOSED	OPEN
PROBE INTO WATER (High Water)	HIGH ALARM	6 & 5	X	
		6 & 5A		X
	HIGH CUTOFF	7 & 8		X
		7 & 8A	X	
PROBE OUT OF WATER (Low Water)	LOW CUTOFF	11 & 12		X
		11 & 12A	X	

Notes:

1. Terminal point number on terminal block.
2. Field wiring by others.
3. Probe uses < 1 mA, 12 VAC trickle current to detect liquid.
4. Relay card output contacts rated 10 amps.
5. 18 AWG used for control circuit wiring.
6. Terminals: Use copper conductors only 60° C (140° F). Recommended Torque = 4.4-7.1 lb.in. Class 1 wirng only.
7. Caution: Bonding between conduit connections not automatic and must be provided as a part of the installation.
8. Makeup relay supplies 120VAC for solenoid valve. All other relay cards provide dry contacts only.
9. Hanging probe assembly in tower cold water basin. (Probe heights are field adjustable.)
10. Recommended operating water level as marked in the tower's COLD WATER BASIN.

MARLEY ITEM #: E80327
UL FILE #: E312361
SUPPLY VOLTAGE: .. 120vAC - 60HZ
FULL LOAD AMPS: 2A
ENCLOSURE TYPE: .. 4X

CONFIDENTIAL: The contents of this document are confidential and constitute the exclusive property of SPX Cooling Technologies. This document and its contents may not be made public in any manner, distributed or loaned to others, or reproduced or copied either in whole or part without the prior written consent of SPX Cooling Technologies.
© as of date(s) in title block SPX Cooling Technologies
Unpublished–All rights reserved under copyright laws.

ECO NUMBER		MARLEY LLC WATER LEVEL CONTROLS				SPX. COOLING TECHNOLOGIES			
REV. BY	CHECKED	MAKE–UP + HA + HCO + LCO							
REV. DATE		DRAWN BY	DATE	CHECKED	APPROVED	ORDER NUMBER	PLOT	DRAWING NUMBER	REV.
		DGWOOD	11/19/2008				1=5.2	08–24245	

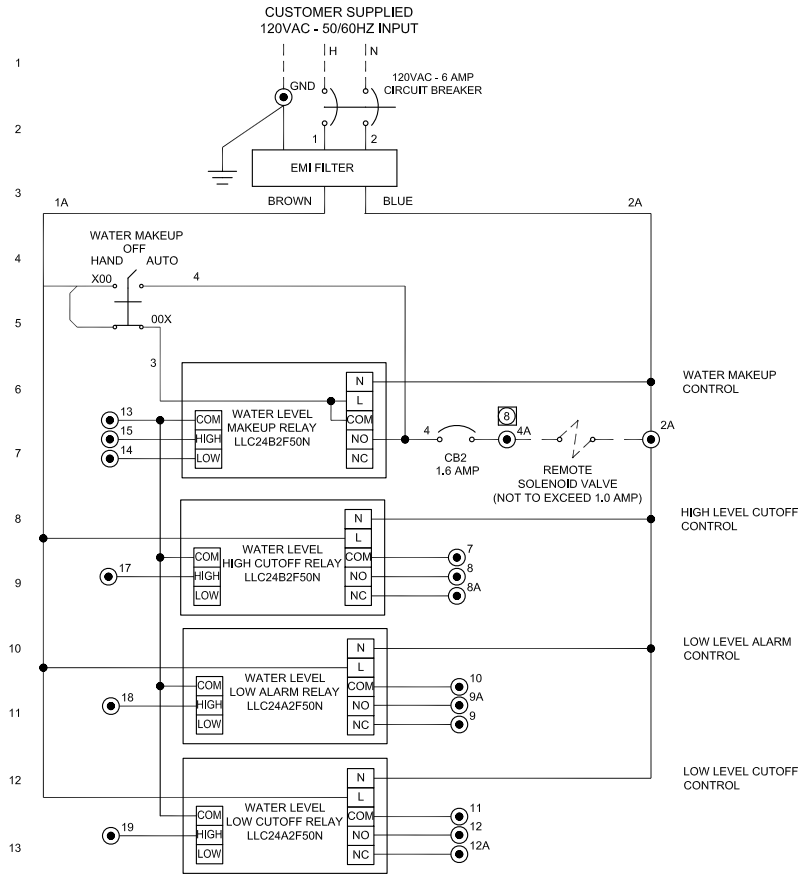

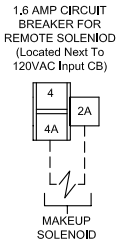

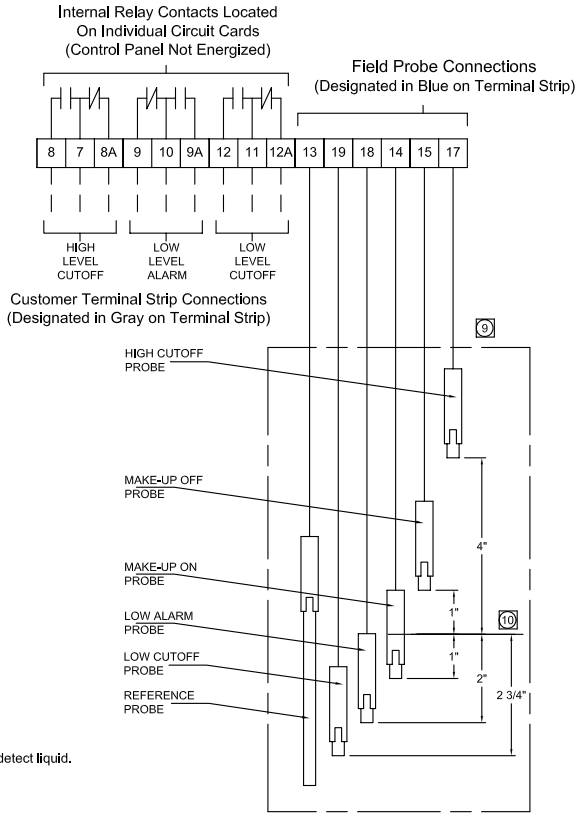

TABLE 1
OPERATION STATUS
(Power Applied)

WATER DEPTH	SIGNAL	CONTACT BETWEEN	CLOSED	OPEN
PROBE INTO WATER (High Water)				
	HIGH CUTOFF	7 & 8		X
		7 & 8A	X	
PROBE OUT OF WATER (Low Water)	LOW ALARM	10 & 9	X	
		10 & 9A		X
	LOW CUTOFF	11 & 12		X
		11 & 12A	X	

Notes:

1. ● Terminal point number on terminal block.
2. —— —— Field wiring by others.
3. Probe uses < 1 mA, 12 VAC trickle current to detect liquid.
4. Relay card output contacts rated 10 amps.
5. 18 AWG used for control circuit wiring.
6. Terminals: Use copper conductors only 60° C (140° F). Recommended Torque = 4.4-7.1 lb.in. Class 1 wirng only.
7. Caution: Bonding between conduit connections not automatic and must be provided as a part of the installation.
8. Makeup relay supplies 120VAC for solenoid valve. All other relay cards provide dry contacts only.
9. Hanging probe assembly in tower cold water basin. (Probe heights are field adjustable.)
10. Recommended operating water level as marked in the tower's COLD WATER BASIN.

MARLEY ITEM #: E80328
UL FILE #: E312361
SUPPLY VOLTAGE: .. 120vAC - 60HZ
FULL LOAD AMPS: 2A
ENCLOSURE TYPE: .. 4X

CONFIDENTIAL: The contents of this document are confidential and constitute the exclusive property of SPX Cooling Technologies. This document and its contents may not be made public in any manner, distributed or loaned to others, or reproduced or copied either in whole or part without the prior written consent of SPX Cooling Technologies.
© as of date(s) in title block SPX Cooling Technologies
Unpublished–All rights reserved under copyright laws.

ECO NUMBER		MARLEY LLC WATER LEVEL CONTROLS				SPX. COOLING TECHNOLOGIES		
REV. BY	CHECKED	MAKE–UP + LA + HCO + LCO						
REV. DATE		DRAWN BY	DATE	CHECKED	APPROVED	ORDER NUMBER	PLOT	DRAWING NUMBER	REV.
		DGWOOD	11/25/2008				1=5.2	08–24246	

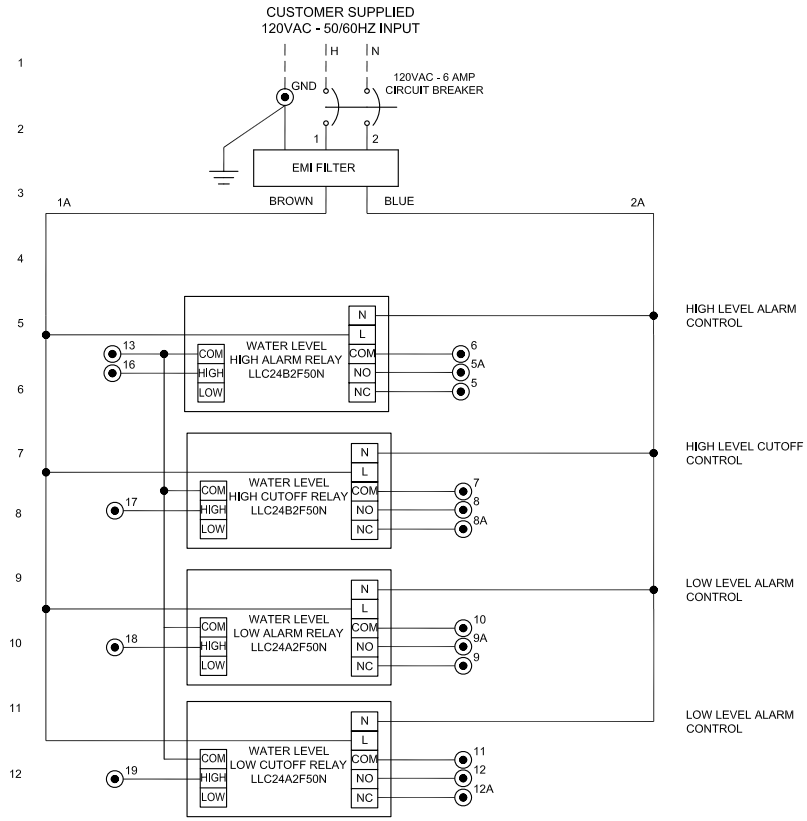

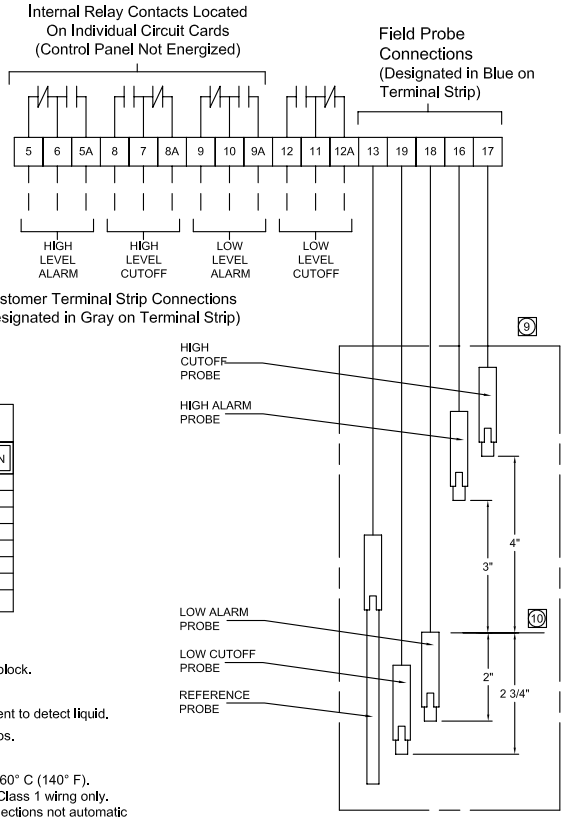

TABLE 1
OPERATION STATUS
(Power Applied)

WATER DEPTH	SIGNAL	CONTACT BETWEEN	CLOSED	OPEN
PROBE INTO WATER (High Water)	HIGH ALARM	6 & 5	X	
		6 & 5A		X
	HIGH CUTOFF	7 & 8		X
		7 & 8A	X	
PROBE OUT OF WATER (Low Water)	LOW ALARM	10 & 9	X	
		10 & 9A		X
	LOW CUTOFF	11 & 12		X
		11 & 12A	X	

Notes:

1. ◉ Terminal point number on terminal block.
2. —— —— Field wiring by others.
3. Probe uses < 1 mA, 12 VAC trickle current to detect liquid.
4. Relay card output contacts rated 10 amps.
5. 18 AWG used for control circuit wiring.
6. Terminals: Use copper conductors only 60° C (140° F). Recommended Torque = 4.4-7.1 lb.in. Class 1 wirng only.
7. Caution: Bonding between conduit connections not automatic and must be provided as a part of the installation.
8. Relay cards provide dry contacts only.
9. Hanging probe assembly in tower cold water basin. (Probe heights are field adjustable.)
10. Recommended operating water level as marked in the tower's COLD WATER BASIN.

MARLEY ITEM #: E80329
UL FILE #: E312361
SUPPLY VOLTAGE: .. 120vAC - 60HZ
FULL LOAD AMPS: 2A
ENCLOSURE TYPE: .. 4X

CONFIDENTIAL: The contents of this document are confidential and constitute the exclusive property of SPX Cooling Technologies. This document and its contents may not be made public in any manner, distributed or loaned to others, or reproduced or copied either in whole or part without the prior written consent of SPX Cooling Technologies.
© as of date(s) in title block SPX Cooling Technologies
Unpublished–All rights reserved under copyright laws.

ECO NUMBER		MARLEY LLC WATER LEVEL CONTROLS HA + LA + HCO + LCO				SPX. COOLING TECHNOLOGIES			
REV. BY	CHECKED								
REV. DATE		DRAWN BY	DATE	CHECKED	APPROVED	ORDER NUMBER	PLOT	DRAWING NUMBER	REV.
		DGWOOD	11/25/2008				1=5.2	08–24247	

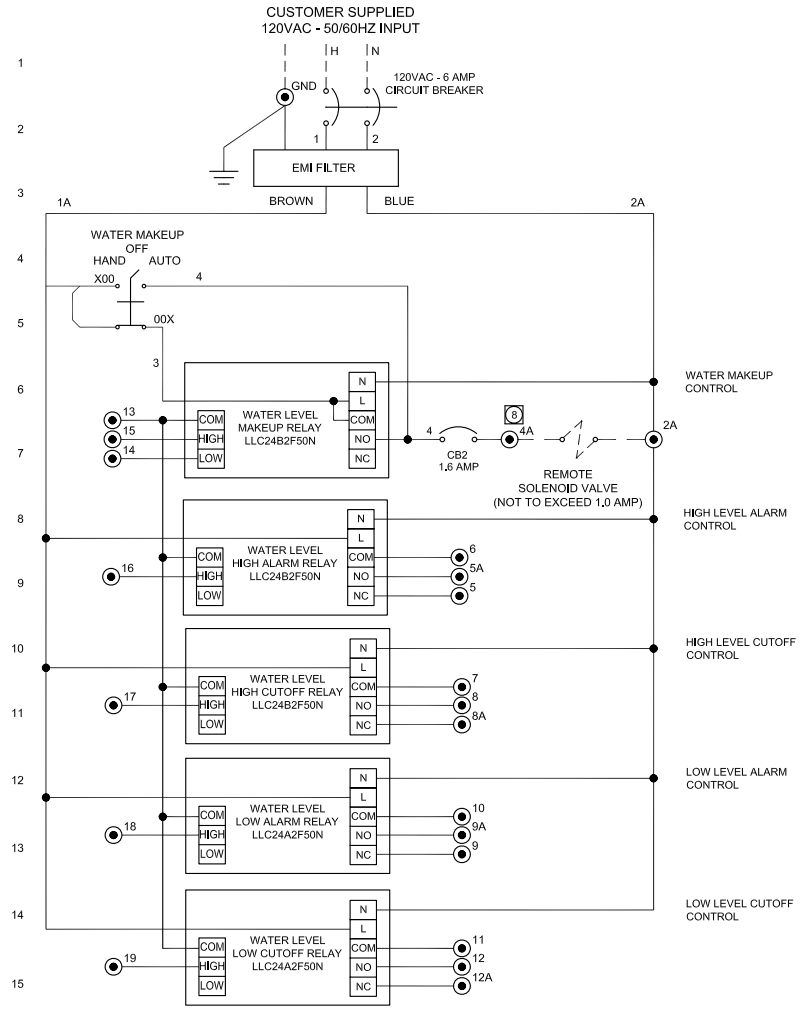

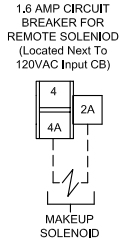

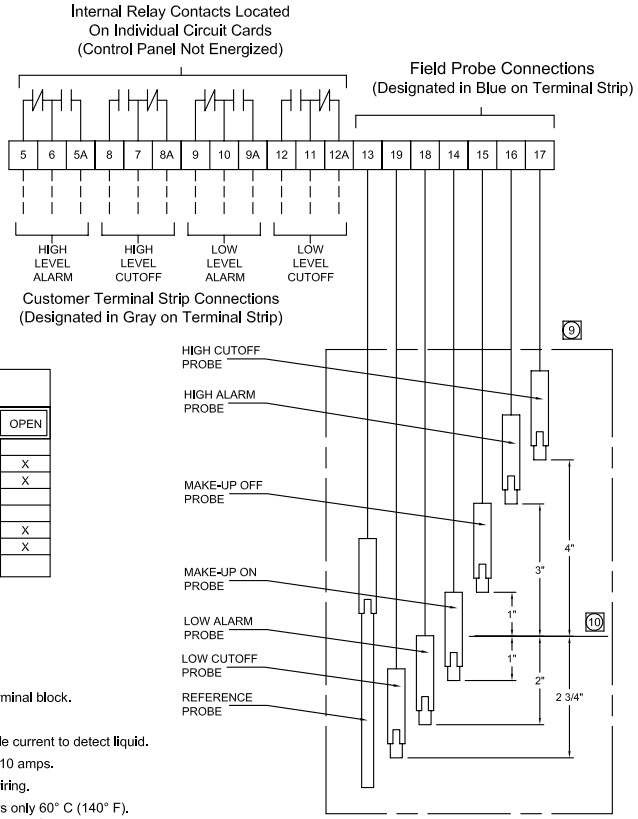

OPERATION STATUS (Panel Energized)				
WATER DEPTH	SIGNAL	CONTACT BETWEEN	CLOSED	OPEN
PROBE INTO WATER (High Water)	HIGH ALARM	6 & 5	X	
		6 & 5A		X
	HIGH CUTOFF	7 & 8		X
		7 & 8A	X	
PROBE OUT OF WATER (Low Water)	LOW ALARM	10 & 9	X	
		10 & 9A		X
	LOW CUTOFF	11 & 12		X
		11 & 12A	X	

Notes:

1. Terminal point number on terminal block.
2. Field wiring by others.
3. Probe uses < 1 mA, 12 VAC trickle current to detect liquid.
4. Relay card output contacts rated 10 amps.
5. 18 AWG used for control circuit wiring.
6. Terminals: Use copper conductors only 60° C (140° F). Recommended Torque = 4.4-7.1 lb.in. Class 1 wirng only.
7. Caution: Bonding between conduit connections not automatic and must be provided as a part of the installation.
8. Makeup relay supplies 120VAC for solenoid valve. All other relay cards provide dry contacts only.
9. Hanging probe assembly in tower cold water basin. (Probe heights are field adjustable.)
10. Recommended operating water level as marked in the tower's COLD WATER BASIN.

MARLEY ITEM #: E80330
UL FILE #: E312361
SUPPLY VOLTAGE: .. 120vAC - 60HZ
FULL LOAD AMPS: 2A
ENCLOSURE TYPE: .. 4X

CONFIDENTIAL: The contents of this document are confidential and constitute the exclusive property of SPX Cooling Technologies. This document and its contents may not be made public in any manner, distributed or loaned to others, or reproduced or copied either in whole or part without the prior written consent of SPX Cooling Technologies.
© as of date(s) in title block SPX Cooling Technologies
Unpublished–All rights reserved under copyright laws.

ECO NUMBER		MARLEY LLC WATER LEVEL CONTROLS				SPX. COOLING TECHNOLOGIES			
REV. BY	CHECKED	MAKE–UP + HA + LA + HCO + LCO							
REV. DATE		DRAWN BY	DATE	CHECKED	APPROVED	ORDER NUMBER	PLOT	DRAWING NUMBER	REV.
		DGWOOD	11/18/2008				1=5.2	08–24248	

SPX COOLING TECH, LLC
7401 WEST 129 STREET
OVERLAND PARK, KS 66213 USA
913 664 7400 | spxcooling@spx.com
spxcooling.com

sp_Z0628617_C | PUBLICADO 8/2023
© 2016-2023 SPX COOLING TECH, LLC | ALL RIGHTS RESERVED
En pos del avance tecnológico, todos los productos están sujetos a cambios en el diseño y/o los materiales sin previo aviso.

SPX TECHNOLOGIES